Installation Instructions for 50555
One Piece Small Block Ford Alternator Bracket

WARNING!
Check for leaks before starting your vehicle. Take precautions when working with electricity – ALWAYS disconnect the battery.
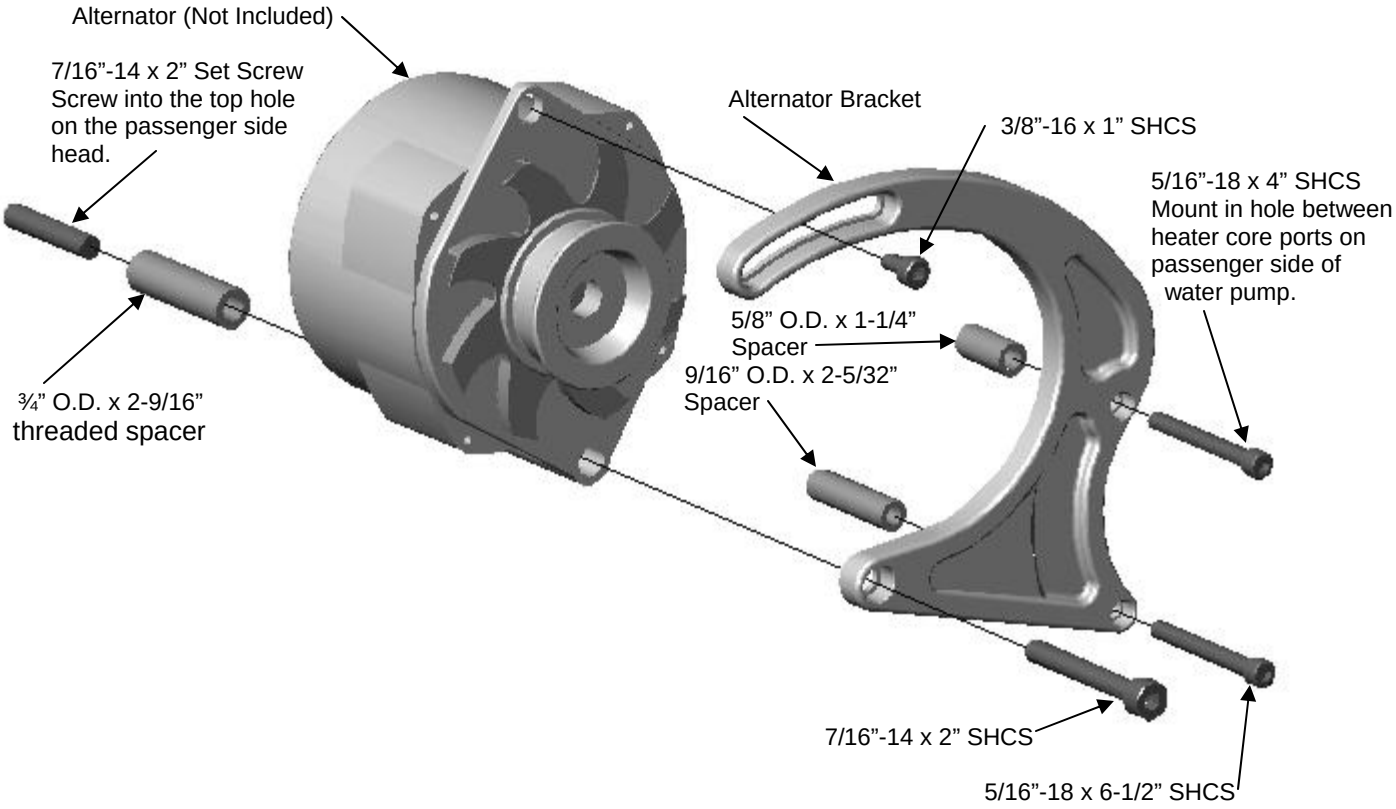
Installation Instructions: