# SUPERDUTY

ADJUSTABLE AIR SPRING SUSPENSION

MN-206
(04711)
ECN2306

## P/N 57214

## This kit is designed to fit Dodge Motorhomes Chassis

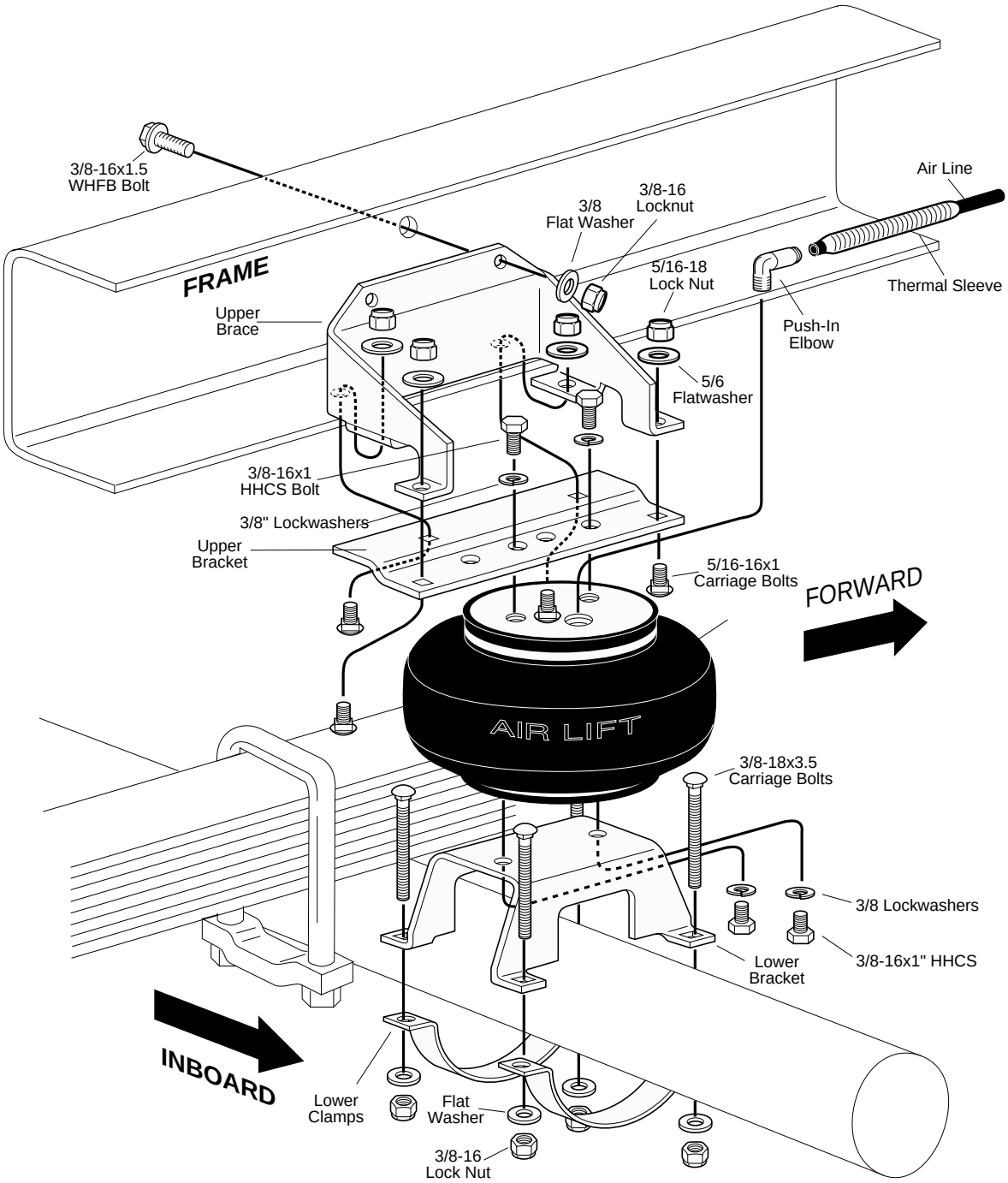


**FIGURE 1**

**WARNING -** DO NOT INFLATE BELLOWS WHEN IT IS UNRESTRICTED OR NOT IN STALLED. BELLOWS MUST BE CONTAINED BY SUSPENSION OR OTHER ADEQUATE STRUCTURE. DO NOT INFLATE BEYOND 100 P.S.I. IMPROPER USE OR OVER INFLATION MAY CAUSE ASSEMBLY TO BURST CAUSING PROPERTY DAMAGE OR SEVERE PERSONAL INJURY.

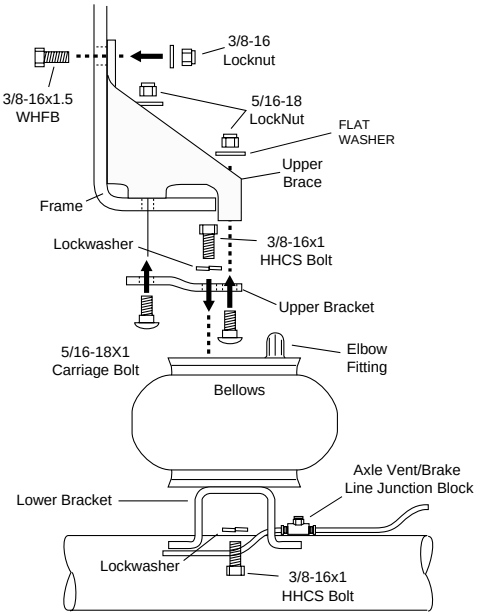


**FIGURE 2**

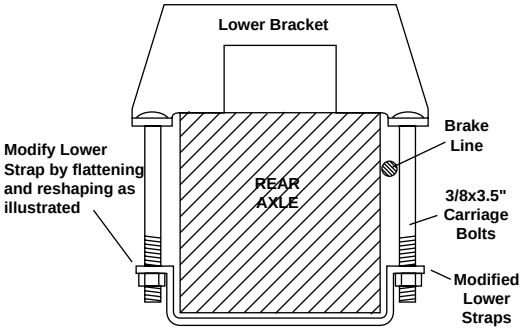


**FIGURE 3**

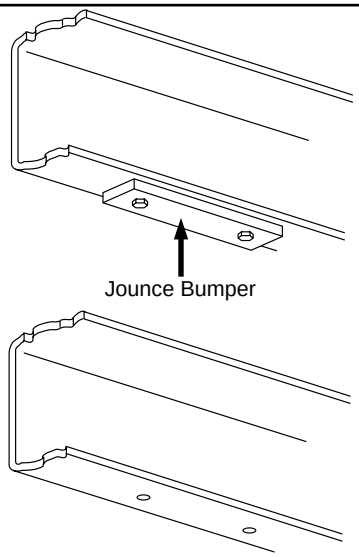


**FIGURE 4**

**NORMAL RIDE HEIGHT:** Normal ride height (no load) - This is defined as the distance between the bottom edge of the fenderwell to the center point of the wheel with the vehicle in an "as delivered condition" (without a load, i.e. tool box, camper, etc.) measurements should be taken before beginning the installation. The distance from the bottom edge of the fenderwell to the center point of the wheel should be recorded. All of our kits are designed to be installed and operated at normal ride height.

1. Jack up rear of vehicle or raise on hoist. Place safety jack stands under axle and adjust so that the vehicle is a normal ride height.

2. Position the bellows with the air port down. Secure the lower bracket to the bellows using two 3/8x16x1" hex head bolts, and two 3/8 lock washers (Figure 2). Assemble left and right units. Tighten to 20 ft-lbs.

3. Position the bellows with the air port up. Install the air fitting on the top side of bellows. Tighten finger tight plus two turns. **Use a 9/16" open end wrench being careful to tighten on the metal hex nut only. DO NOT OVER TIGHTEN**. This fitting is precoated with thread sealant. Be sure to position the air fitting so that it faces the front of the vehicle (Figure1). Repeat for other side.

4. Remove the rubber jounce bumper. This will not be reused.

5. Insert 5/16" carriage bolt into the front outboard hole in each upper bracket (Figure 5).

6. Attach upper bracket to bellows using two 3/8-16x1" HHCS and lock washers (Figure 2). Assemble both sides, making sure to use the correct set of holes (Figure 5). Tighten to 20 ft-lbs.

7. Set the assembly into place on the axle, inboard of the leaf spring (Figure 1 & 2). **Note:** For pre-1973 chassis (Figure 3), you may need to reform lower straps for square axle housing. This can be accomplished with a bench vise.
   Insert upper brace into frame rail (Figure 1, 2 & 5). Slide it under any lines or wires so that it is against the frame. Align the bottom holes of the upper bracket with the front jounce bumper hole in the frame. Insert the front carriage bolt, inserted in step 5, through the frame rail and the upper brace. Loosely assemble unit with a 5/16" lock nut. Drill remaining hole with a 5/16" drill bit, using bracket as a template. Insert another carriage bolt up from the bottom through upper bracket, frame and upper brace. Secure loosely with lock nut. Some vehicles will have an existing hole in the frame that will match one of the holes in the upper brace. If no hole exists, drill one 3/8" hole using the upper bracket as a template (Figure 5). Insert a 3/8x1.5"WHFB through the frame from the outside. Attach 3/8" lock nut and securely tighten this bolt to 20 ft-lbs., insuring that the brace fits tightly against inner frame rail (Figure 1). Tighten nuts holding upper brackets, frame and inner brace securely. Insert two 5/16" carriage bolts upward through the other holes in the upper bracket and upper brace and retain with lock nuts. Tighten to 20 ft-lbs.

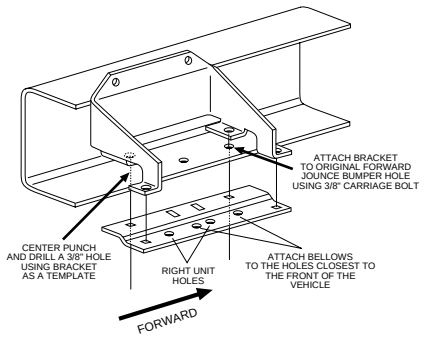


**FIGURE 5**

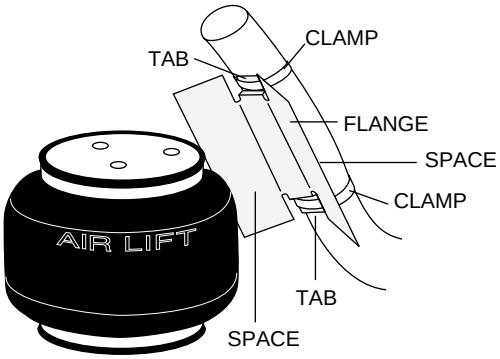


**FIGURE 6**

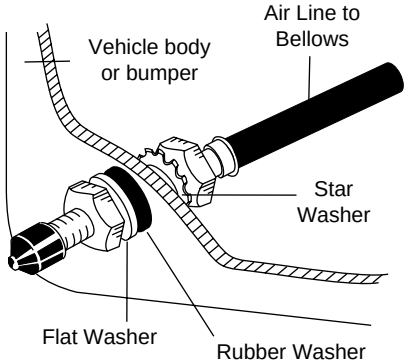


**FIGURE 7**

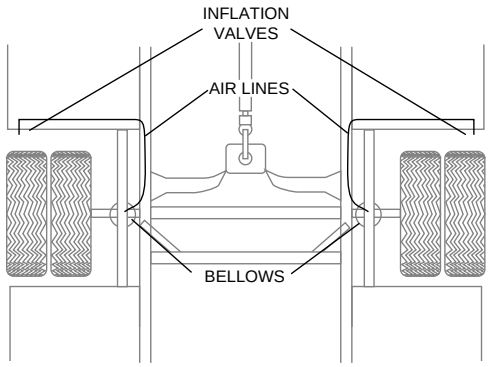


**FIGURE 8**

8. Insert carriage bolts down through lower bracket holes and lower clamps and loose assemble with flat washers 3/8-16 nuts. Note: Be sure the brake line is not clamped between the bracket and the axle. Align the lower bracket to obtain the best alignment so that the top and bottom bellow mounting plates are parallel both vertically and horizontally. Hold lower bracket in place while securing carriage bolt with the lock nuts (Figure 1).

9. Installation of this kit requires exhaust heat shield (Figure 7). The shield is attached with the stainless steel clamps to the exhaust pipe, with the flanges being bent inward. Shield may be trimmed or bent to attain component clearance. Bend tabs to provide 1/2” dead air space between exhaust pipes and heat shield and maximum clearance with bellows. Tailpipe should be loosened and rotated to provide maximum clearance.

**AIR LINE INSTALLATION**

A. Select locations on the vehicle for the air inflation valve (Figure 8). The location chosen should provide protection so the valve will not be damaged but be accessible for the air inflation chuck. Recommended location is in the wheel well or lower body ahead of rear wheel. One on each side provides ease of filling, checking and measuring body height to compensate for side to side lean and front to rear sag.

B. Measure from selected location inboard along frame rail to center of jounce bumper bracket. Measure this same distance from each pre-installed inflation valve on the air line.

C. Using a standard tube cutter, a razor blade, or very sharp knife to cut the air line. A clean square cut will ensure against leaks. Then cut air line off squarely.

D. Slide a thermal sleeve onto air line from the cut end on the tail pipe side on vehicles.

E. Push cut end of air line into the air fitting as far as it will go (9/16”). This is a push to connect fitting on the air line. You will hear or feel a definite “click.”

F. Slide the thermal sleeve down to the air fitting.

G. Route the air line from the bellows to the pre-determined inflation valve location. Insure that it is protected from the direct heat of the exhaust system and kept away from sharp edges. Caution should be taken not to kink or bend the air line. Secure along frame with the nylon ties supplied with this kit (Figure 8).

H. Drill two 5/16” holes, and install inflation valves and washers (Figure 7). Then inflate the bellows and check the fittings for air leaks with a solution of soap and water.

I. Raise vehicle and remove safety jack stands. Lower vehicle to ground.

J. This now completes the installation. Before proceeding, check once again to be sure you have proper clearance around the bellows. With a load on your vehicle and the air springs inflated, you must have sufficient clearance all around the bellows.

K. For best ride use only enough air pressure in the bellows to level the vehicle when viewed from the side (front to rear). Inflate the bellows to maintain this height under any condition of load. NOTE: too much air pressure in the bellows will result in a stiffer ride, while too little air pressure will allow the vehicle to bottom out. Too little air pressure will also not provide the improvement in handling that is possible. **TO PREVENT POSSIBLE DAMAGE, MAINTAIN A MINIMUM OF 20 P.S.I. IN THE BELLOWS AT ALL TIMES.**

L. Recheck air pressure after 24 hours. A 5-7 p.s.i. loss after initial installation is normal. If pressure has dropped more than 7 lbs. re-test for leaks with a soapy water solution.

**RECOMMENDED PRESSURES**

| MINIMUM | MAXIMUM |
|---|---|
| 20 P.S.I. | 100 P.S.I. |

**NOTE**

1. **IMPORTANT:** For your safety and to prevent possible damage to your vehicle, do not exceed maximum load recommended by the vehicle manufacturer. Although your bellows are rated at maximum inflation pressure of 100 p.s.i., this pressure may represent too great of load on some vehicles. Check your vehicle owner's manual and do not exceed maximum loads listed for your vehicle.
   When inflating your Air Lift bellows, add pressure in small quantities, check pressure frequently during inflation. The bellows require much less air volume than a tire and there fore inflate much quicker.

2. Should it become necessary to raise the vehicle by the frame, make sure the system is at the minimum(20 psi) to reduce the tension on suspension/brake components.. **Use of on-board leveling systems or routine tire changes DOES NOT require deflation or disconnection.**

***Thank you for purchasing Air Lift Products***


**AIR LIFT COMPANY**
**P.O. BOX 80167**
**Lansing, MI 48908-0167**


**FOR TECHNICAL ASSISTANCE CALL 1-800-248-0892**

**Caution: DO NOT EXCEED THE VEHICLE MANUFACTURERS MAXIMUM GROSS VEHICLE WEIGHT RATING.**

Printed in the USA