350 S. St. Charles St. Jasper, In. 47546
Ph. 812.482.2932 Fax 812.634.6632
www.ridetech.com

Part # 11160399
67-69 GM "F" Body Level 3 Complete Air Suspension System

Front Components:

1	11163011	TQ Series Front Shockwaves
1	11162899	Front Lower StrongArms
1	11163699	Front Upper StrongArms
1	11169100	Front MuscleBar Sway Bar w/ PosiLinks
1	11169500	Complete Tru Turn

Rear Components:

1	11167199	Rear AirBar – Bolt-on 4 Link
1	24350701	Rear Master TQ Series Shockwaves
1	11169102	Rear MuscleBar Sway Bar w/ PosiLinks

Compressor System:

1	30314100	5 gallon AirPod w/RidePro Digital Control System
1	30400034	LevelPro Upgrade - 4 External Height Sensors
1	31008500	Two key fob remotes with antenna

350 S. St. Charles St. Jasper, In. 47546
Ph. 812.482.2932 Fax 812.634.6632
www.ridetech.com

Part # 11163011
67-69 GM "F" Body Front TQ Series Shockwaves
For Use w/ StrongArms & RideTech Spindles

ShockWave Assembly:

2	24090399	104mm Master Series rolling sleeve assembly
2	24339999	3.2" stoke TQ Series shock
2	90001994	.625" I.D. bearing
4	90001995	Bearing snap ring
2	90009989	Tall Delrin stud top – 2.75"
2	70008913	Locking Ring

Components:

2	90002313	Tall Delrin stud top base – 2.75"
2	90001902	Aluminum cap for Delrin ball
2	90001903	Delrin ball upper half
2	90001904	Delrin ball lower half
2	31954201	¼"npt x ¼" tube swivel elbows
4	90002221	Reservoir Mount
1	85000003	4mm Allen Wrench

Hardware:

2	99562003	9/16" SAE Nylok jam nut	Stud top hardware
12	99050000	4mm Socket Head Screw	Reservoir Mount

STRONGARMS™
by Air Ride Technologies

Installation Instructions

1. To allow clearance for the Shockwave, some trimming must be done on the inside of the coil spring pocket as shown by the white line in the picture. This is best done with either a cut off wheel or plasma cutter. Grind all cuts smooth when finished.

Note: It may be helpful to go ahead and install the lower StrongArms and Shockwaves to determine exactly what needs to be removed.

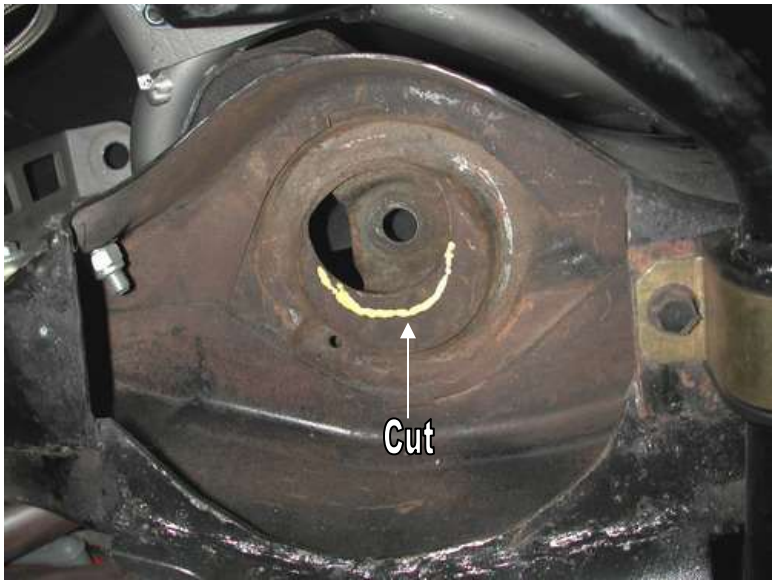

2. The Shockwave stud top will come in contact with the coil spring retainer, so it must be opened up towards the engine. A die grinder works well here.

1. Stud top aluminum base
2. Delrin ball lower half
3. Delrin ball upper half
4. Aluminum cap
5. 9/16” SAE Nylok jam nut
6. Threaded stud (screwed onto shock shaft)
7. Rebound adjusting knob
8. Screw

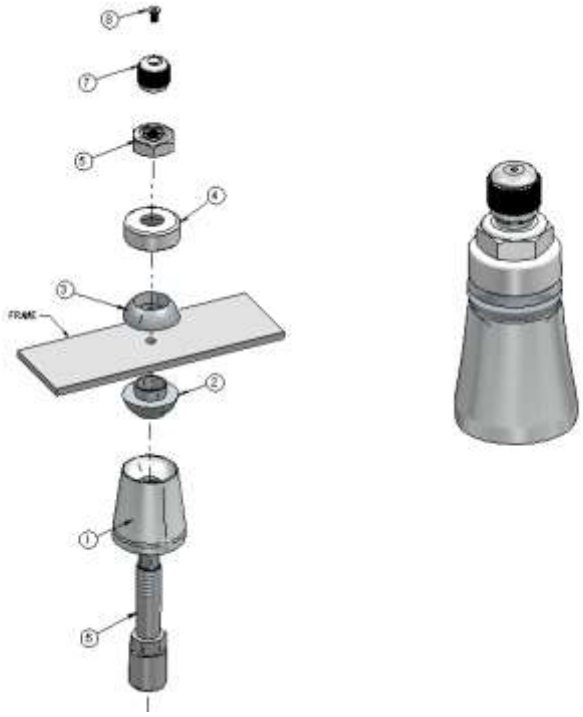

3. Some trimming must also be done on the outside of the frame pocket to allow clearance for the Shockwave.

4. Apply thread sealant to a 90 degree air fitting and screw it into the top of the Shockwave. The air fitting location can be rotated by twisting the bellow assembly separate of the shock.

5. Place the Shockwave into the coil spring pocket with the stud sticking through the OEM shock hole. See assembly diagram below.

Note: The airline must also be routed at this time. It can be ran through the subframe toward the rear of the vehicle.

6. Raise the lower arm up to the Shockwave and bolt them together using the 1/2” x 3 ¼” bolt and Nylok supplied w/ the lower arms. An aluminum spacer will be on each side of the bearing.

7. Raise the lower control arm to full compression and double-check to make sure the Shockwave does not rub on anything at anytime. **Allowing the Shockwave to rub on anything will cause failure and is not a warrantable situation.**

8. The best ride quality will occur around 50-60% suspension travel; depending on vehicle weight this typically occurs around 85-100 psi.

SHOCKwave®
by Air Ride Technologies

The care and feeding of your new ShockWaves

1. Although the ShockWave has an internal bumpstop, **DO NOT DRIVE THE VEHICLE DEFLATED RESTING ON THIS BUMPSTOP. DAMAGE WILL RESULT.** The internal bumpstop will be damaged, the shock bushings will be damaged, and the vehicle shock mounting points may be damaged to the point of failure. **This is a non warrantable situation.**

2. Do not drive the vehicle overinflated or "topped out". Over a period of time the shock valving will be damaged, possibly to the point of failure. **This is a non warrantable situation!** If you need to raise your vehicle higher that the ShockWave allows, you will need a longer unit.

3. The ShockWave is designed to give a great ride quality and to raise and lower the vehicle. **IT IS NOT MADE TO HOP OR JUMP!** If you want to hop or jump, hydraulics are a better choice. This abuse will result in bent piston rods, broken shock mounts, and destroyed bushings. **This is a non warrantable situation.**

4. Do not let the ShockWave bellows rub on anything. Failure will result. **This is a non warrantable situation.**

5. The ShockWave product has been field tested on numerous vehicles as well as subjected to many different stress tests to ensure that there are no leakage or durability problems. Failures have been nearly nonexistent unless abused as described above. If the Shockwave units are installed properly and are not abused, they will last many, many years. **ShockWave units that are returned with broken mounts, bent piston rods, destroyed bumpstops or bushings, or abrasions on the bellows will not be warrantied**

350 S. St. Charles St. Jasper, In. 47546
Ph. 812.482.2932 Fax 812.634.6632
www.ridetech.com

Part # 11162899
67-69 GM "F" Body & 68-74 GM "X" Body Lower StrongArms

For Use w/ Shockwave or CoilOver

Components:

1	90000621	Driver side lower arm
1	90000622	Passenger side lower arm
2	90000898	Ball joint (includes boot, grease fitting, castle nut & cotter pin)
4	90000516	Inner bushing sleeve - .5" I.D. x .75" O.D. x 2.375" long
8	70010759	Delrin bushing half – 1.5" O.D.
4	90002062	Aluminum spacers – shock to lower arm

Hardware:

2	99501024	1/2"-13 x 3 ¼" Gr.5 bolt	Shockwave to lower arm
4	99501005	1/2"-13 x 3 ½" Gr.5 bolt	Lower arm to frame
6	99502001	1/2"-13 Nylok Nut	Lower arm
2	99371010	3/8" x 5 ½" USS bolt	Sway bar end link
4	99372002	3/8" USS Nylok Nut	Sway bar end link & Steering Stop
2	99371005	3/8" x 1 ¼" USS bolt	Steering stop

STRONGARMS™
by Air Ride Technologies

Installation Instructions

1. After removing the factory lower control arm, clean the bushing mounting surfaces on the frame.

2. Fasten the lower arm to the frame with the ½" x 3 ½" bolts and Nylok nuts supplied.

Note: On some cars the frame brackets may be pinched and will need to be spread back apart to allow bushing to slide in.

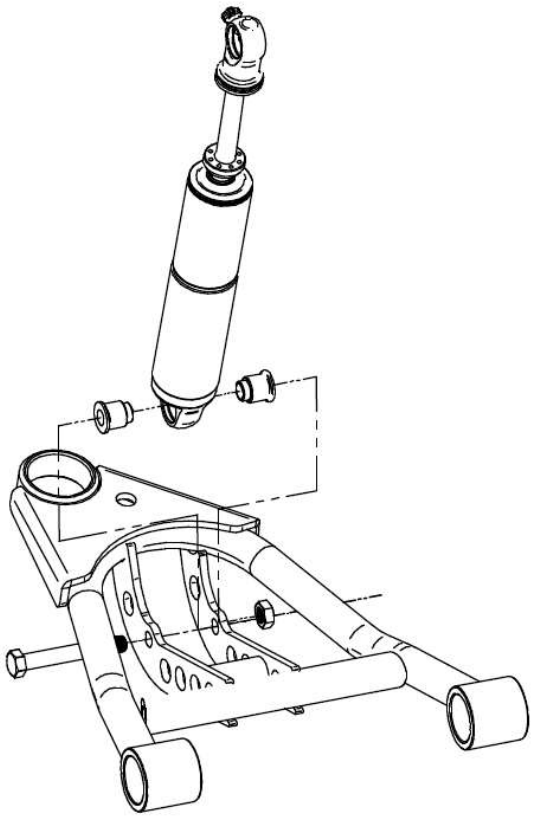

3. Swing the lower StrongArm up to the Shockwave and secure with the ½" x 3 ¼" bolt and Nylok nut, an aluminum spacer must be installed on each side of the bearing.

4. Slide the ball joint boot over the stud, then push the stud up through the spindle. Secure w/ the new castle nut and cotter pin supplied.

5. Grease the ball joints.

6. The Delrin Bushings are self-lubricating, no grease is required.

7. Screw a 3/8” x 1 ¼” bolt and nut into the hole in the side of the lower arm. This will act as an adjustable steering stop. After the wheel is install check wheel clearance all full lock and adjust as necessary.

8. If using factory style sway bar, shorten the sway bar end link spacer to 1 ½” tall. New 3/8” x 5 ½” bolts and Nylok nuts are supplied.

STRONG ARMS™
by Air Ride Technologies

Item #	Description	Qty.
1.	Passenger side arm	1
1.	Driver side arm	1
2.	Aluminum bearing spacer	4
3.	Ball joint	2
5.	Inner bushing sleeve	4
6.	1/2”-13 x 3 ¼” bolt	2
7.	1/2"-13 x 3 ½” bolt	4
8.	1/2”-13 Nylok nut	6
9.	3/8”-16 x 1 ¼” bolt	2
10.	3/8”-16 Nylok nut	2
11.	Delrin Bushing Half	8

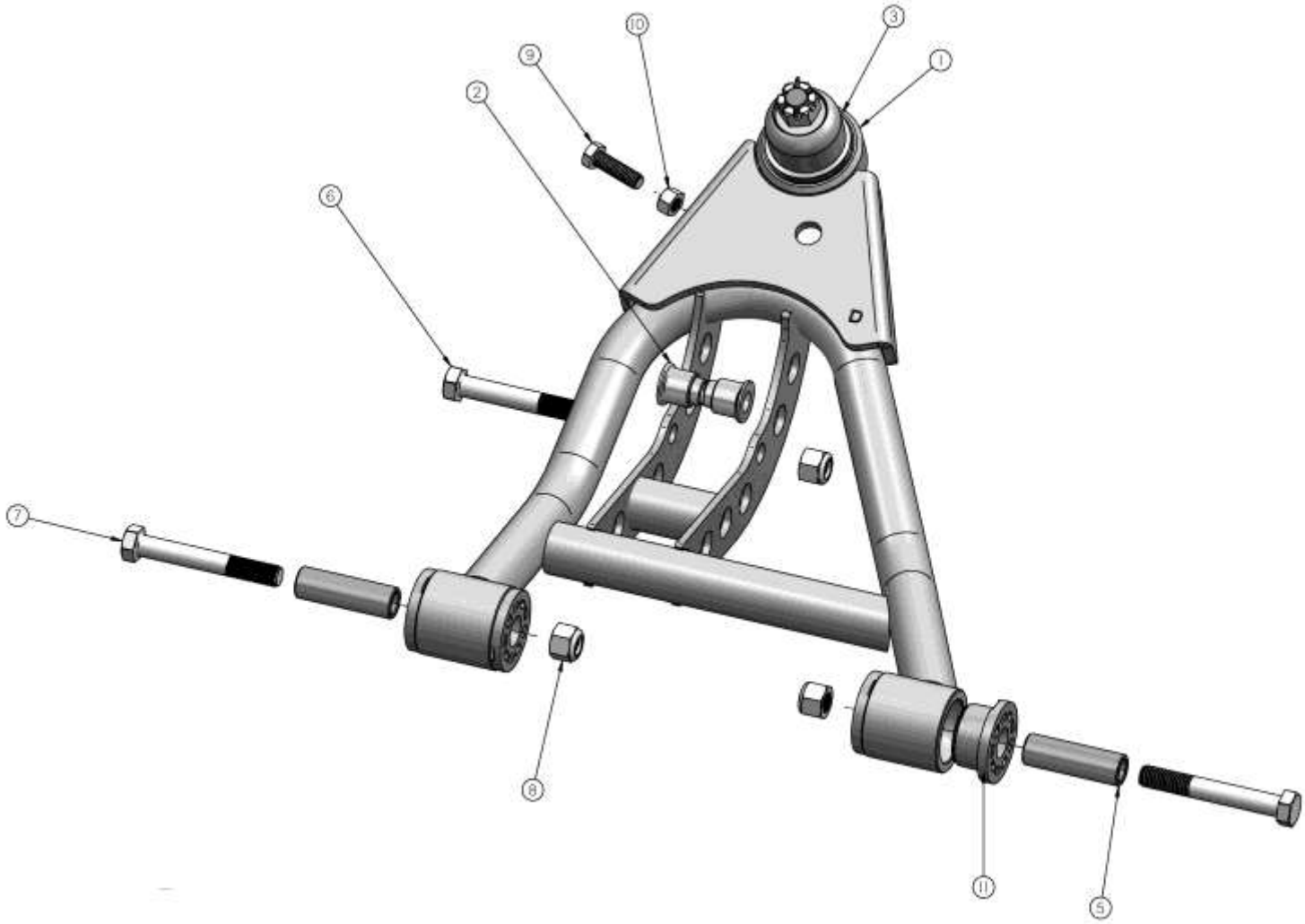

350 S. St. Charles St. Jasper, In. 47546
Ph. 812.482.2932 Fax 812.634.6632
www.ridetech.com

Part # 11163699
67-69 GM "F" Body & 68-74 GM "X" Body Upper StrongArms

Components:

1	90002390	Drivers side arm
1	90002391	Passenger side arm
2	90000908	Ball joint (includes boot, grease fitting, castle nut & cotter pin)
2	90000914	Caster Adjustable Cross shaft
2	70010826	Delrin Bushing – no ledge
2	70010827	Delrin Bushing – small ledge
4	70010759	Delrin Bushing – outer
4	70010883	Zero Offset Caster Slugs
2	90001083	Medium bump stop w/ hardware

Hardware:

4	99163001	Stainless Washer	Cross shaft to bushing
4	99622005	5/8" SAE crimp locking nuts	Cross shaft to bushing

STRONG ARMS™
by Air Ride Technologies

Installation Instructions

Driver Side Top View

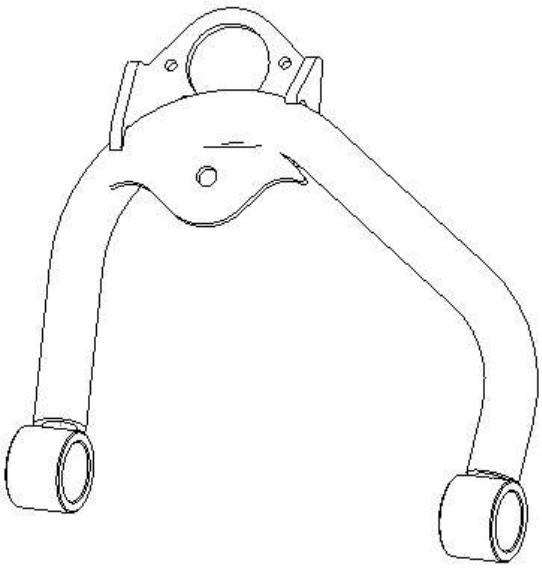

1. On some cars, to remove the upper control arm you must remove the bolts, which are pressed into the frame. We made this slide hammer adapter (a nut with a piece of angle iron welded to it) to aid in removing the bolts.

2. Fasten the upper arm to the frame using the factory hardware. Reinstall the current alignment shims, but **vehicle must be realigned.** This arm was designed with an extra 2 degrees of positive caster with the centered caster slugs. Additional caster slugs are available if more or less caster is desired. By changing the caster slugs you can achieve the caster setting you are wanting without having to run a lot of shims. Caster is explained of the next page.

3. Drop ball joint down through upper arm. Slide ball joint boot over stud, then place boot retainer over the boot. Clamp assembly tight w/ the hardware supplied.

4. Fasten the ball joint to the spindle w/ the new castle nut and cotter pin supplied.

5. Tighten the cross shaft nuts enough to create drag on the delrin bushings, the arm should still move.

6. Lubricate the ball joint w/ standard grease.

STRONG ARMS™
by Air Ride Technologies

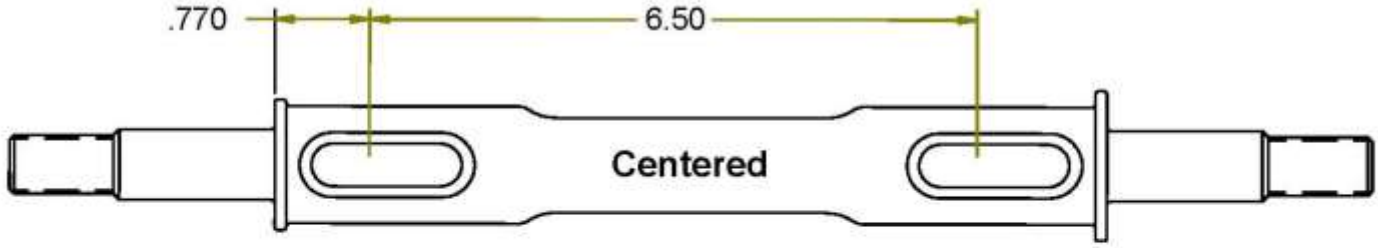

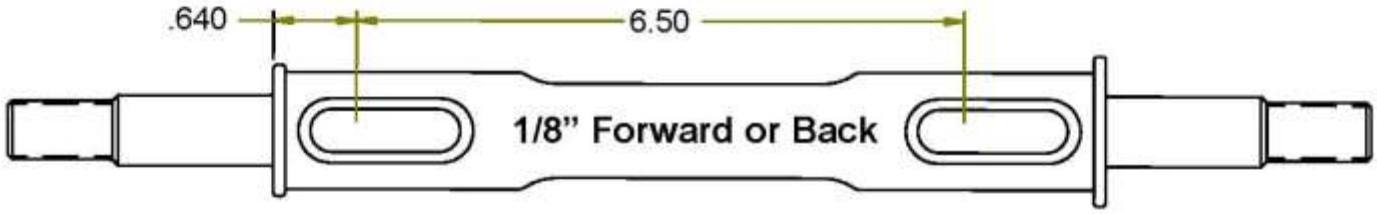

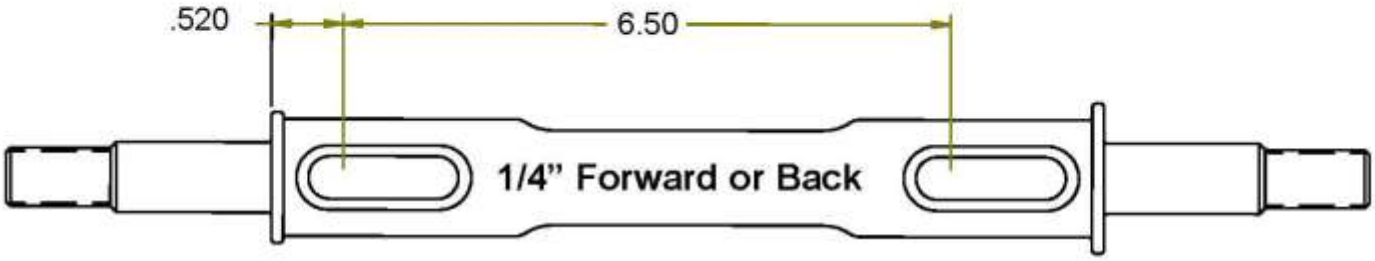

These Strong Arms come equipped with a changeable caster slug setup. This allows you to add or remove caster from the front suspension, if desired. The caster slugs that come in the kit are setup to put the control arm in the centered position, which is approximately 3 degrees of caster. The caster slugs allow you to add or remove caster without having to use a stack of shims. If more or less caster is desired, optional caster slugs can be purchased from your Ridetech dealer or Ridetech.

Caster Explained:

To understand caster you need to picture an imaginary line that runs through the upper ball joint and extends through the lower ball joint. From the side view the imaginary line will tilt forward or backward. The tilting of this imaginary line is defined as caster.

Caster is measured in degrees by using a caster camber gauge. If the imaginary line described above tilts towards the back of the car, at the top, then you will have positive caster. If the imaginary line tilts forward then you would have negative caster.

Positive caster provides the directional stability in your car. Too much positive caster will make the steering effort difficult. Power steering will allow you to run more positive caster. Negative caster requires less steering effort but can cause the car to wander down the highway.

STRONG ARMS™
by Air Ride Technologies

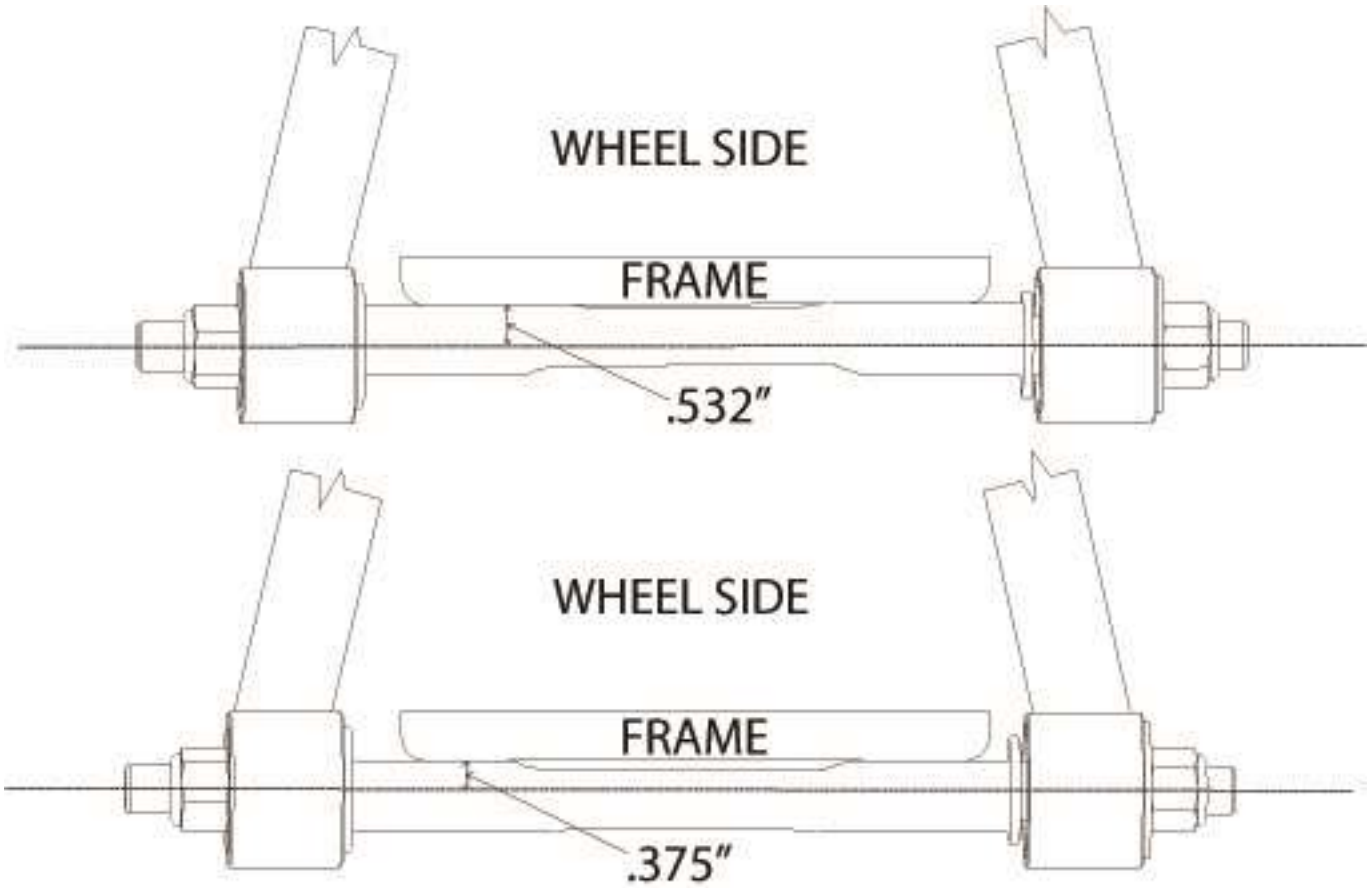

Offset Upper Cross Shaft

The cross shaft that is used in the upper control arm is offset. The offset combined with the caster slug option allows you to achieve the alignment setting you desire with minimal shims. To change the direction that the Icon faces, simply spin the cross shaft in the control arm.

If you are after an aggressive **Track or Autocross Alignment**, bolt the control arm to the frame bracket with the arm offset to the inside of the car (like the top illustration). The Ridetech Icon will be facing the engine.

If a **Street Alignment** is desired, bolt the control to the frame bracket with the arm offset to the outside of the car (like the bottom illustration). The Ridetech Icon will be facing the wheel.

STRONG ARMS™
by Air Ride Technologies

Item #	Description	Qty.
1.	Passenger side arm	1
1.	Driver side arm **(Shown)**	1
2.	Extension stop	2
3.	Ball joint	2
5.	3/8”-16 Nylok nut & washer	2
6.	1/4"-28 x 7/8” hex bolt	8
7.	1/4"-28 nut	8
8.	Inner Delrin bushing w/ledge	2
9.	Inner Delrin bushing no ledge	2
10.	Outer Delrin bushing	4
11.	Stainless washer	4
12.	5/8”-18 lock nut	4
13.	Caster Adjustable Cross shaft	2
14.	Caster Slug	4

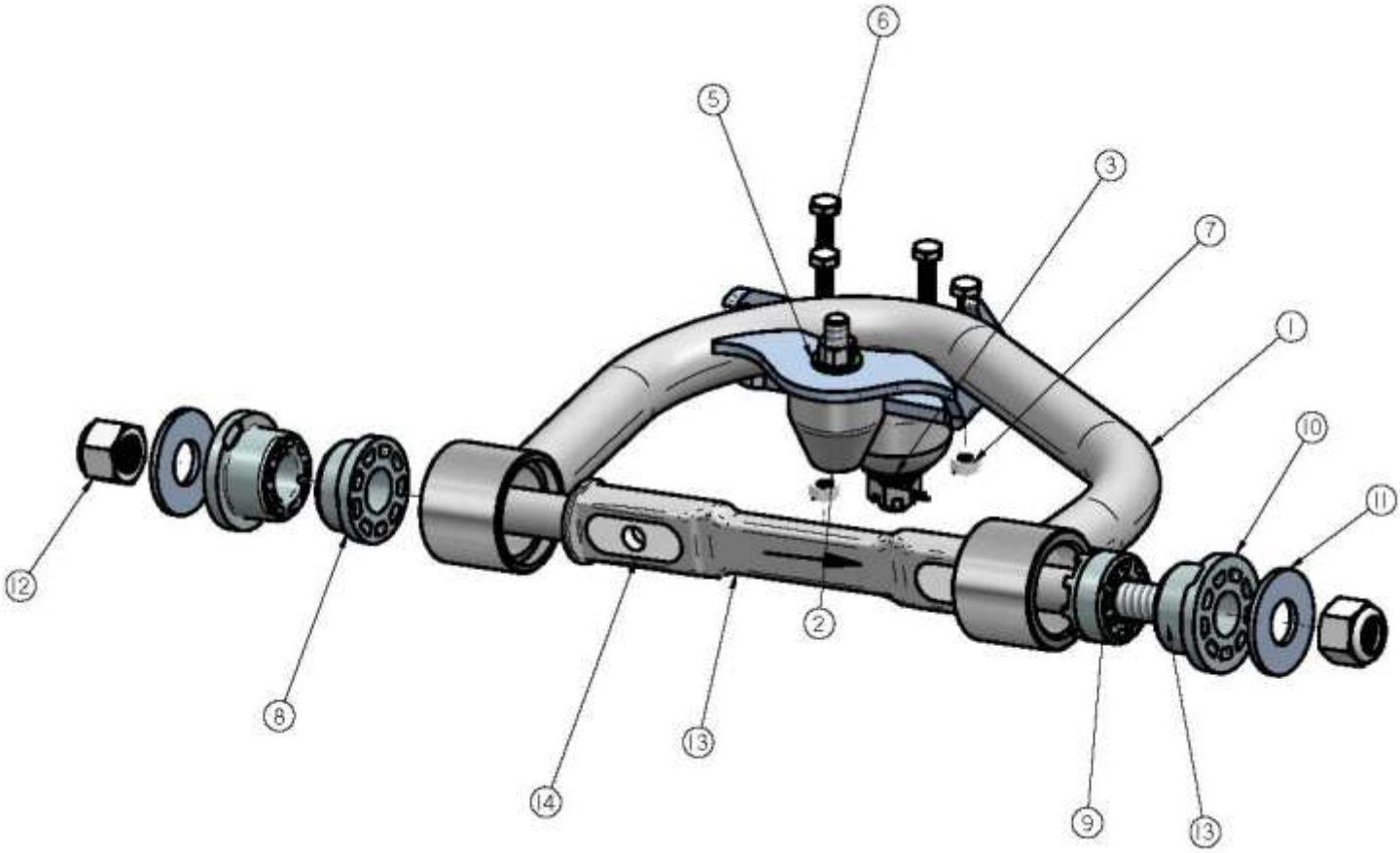

ridetech
Air Ride Technologies
350 S. St. Charles St. Jasper, In. 47546
Ph. 812.482.2932 Fax 812.634.6632
www.ridetech.com

Part # 11169500
67-69 Camaro & 68-74 Nova TruTurn System

TRU TURN
MUSCLECAR STEERING COMPONENTS

Item #	Part #	Description-Torque Specification	Qty.
1.	90009930	Drag link bracket	1
2.	90003001	Driver inner tie rod	1
2.	90003002	Pass. Inner tie rod (bent)	1
3.	90007500	Adjusting sleeve	2
4.	90001590	Heim end	2
5.	11009300	RideTech spindle	1 pr.
6.	90003000	Steering arm	1 pr.
7.	90009931	Large stud – tie rod	2
8.	90009932	1/2”-20 Tapered nut	4
9.	99501010	1/2"-20 x 2 ¼” bolt-75 ft lbs	2
10.	99622003	5/8”-18 Lock Nut-100 ft lbs	2
11.	99432005	7/16”-20 castle nut-35 ft lbs	6
12.	99800003	5/8”-18 LH jam nut	2
13.	99800002	5/8”-18 RH jam nut	2
14.	99952002	3/32” cotter pin	4
15.	99502005	1/2"-20 x2” bolt -75 ft lbs	2
16.	90009933	Small stud – drag link	2
17.	99502010	1/2"-20 Lock Nut-75 ft lbs	2
18.	99503001	1/2" SAE flat washer	2
	99433002	7/16” SAE flat washer	6

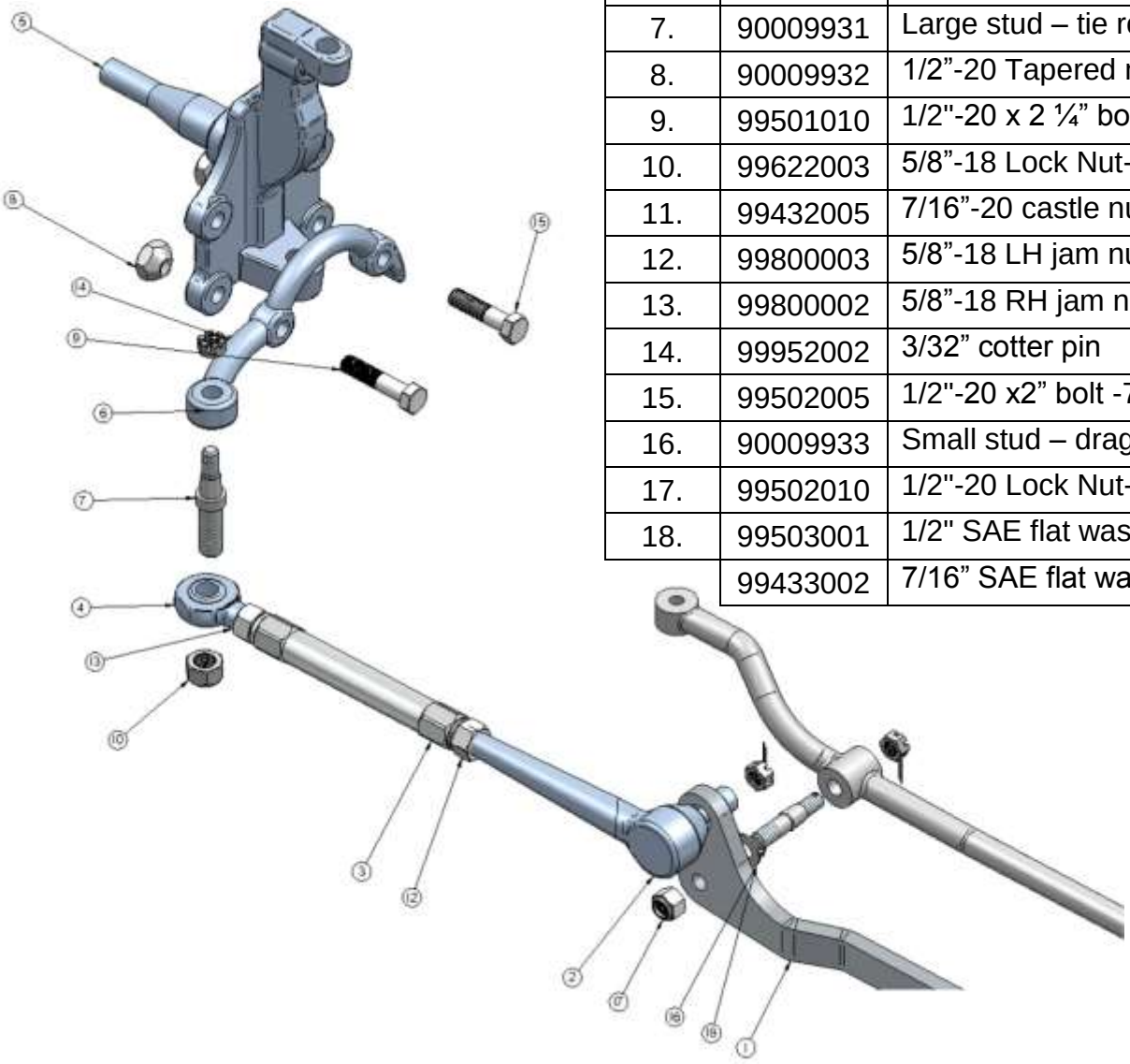

350 S. St. Charles Street Jasper, In. 47546 www.ridetech.com

Installation instructions

1. Raise and safely support the front of your vehicle at a comfortable working level

2. Remove existing spindles and steering linkage, leaving only the control arms, steering box, and pitman arm in place.

3. Remove OEM inner tie rod ends from the OEM draglink as you will be re-using that original draglink.

4. Assemble the new RideTech draglink adapter bracket onto the OEM draglink with the supplied tapered studs and washers per the enclosed drawings.

5. Install the new RideTech spindles onto the control arms per the enclosed drawings. NOTE: The RideTech spindle has been fitted with the RideTech control arms. IF you are using another brand of control arms, or OEM control arm…MAKE SURE to run the suspension through its travel to ensure there is no ball joint bind and that proper alignment can be achieved. Ball joint nut torque = 83 ft lbs

6. Install the remainder of the Tru Turn steering linkage as shown in the attached drawings. MAKE SURE that ALL cotter pins are used in the appropriate places and that there is no binding or interference throughout the entire suspension travel.

7. Adjust the camber and toe roughly until you can get the vehicle to a proper alignment shop. The recommended alignment settings are:

Camber - -.5 to -1.5 [within .3 from side to side]
Caster – 4 to 7 degrees positive
Toe - 1/8 to ¼ toe in
Feel free to experiment with alternative alignment settings that may be more appropriate for your particular driving style.

Installation notes:

A. The draglink bracket has one attachment hole [A] that is slotted. This is to accommodate the variations in manufacturing and machining processes from 1967, as well as any wear that may have occurred to the original draglink since that time.

B. RideTech has successfully fitted a Baer disc brake system to this spindle. Other brands of disc brake brackets MAY need clearancing or adjustment for proper installation. The RideTech spindle duplicates the GM A body and F body bolt pattern [B] for brake bracket installation.

C. MAKE SURE that the cotter pins are properly installed in all appropriate places [C] to ensure that the castle nuts do not become loose and fail. These are VERY important connections!

D. IF your oem drag link is severely worn at the inner tie rod attachment holes [D] you may need to replace that unit with a new oem style draglink to ensure that the [RideTech supplied] tapered pin adapters DO NOT pull through that hole.

E. If you are using the Ridetech lower control arms the steering stop bolt in the rear of the control arm will no longer be used.

350 S. St. Charles St. Jasper, In. 47546
Ph. 812.482.2932 Fax 812.634.6632
www.ridetech.com

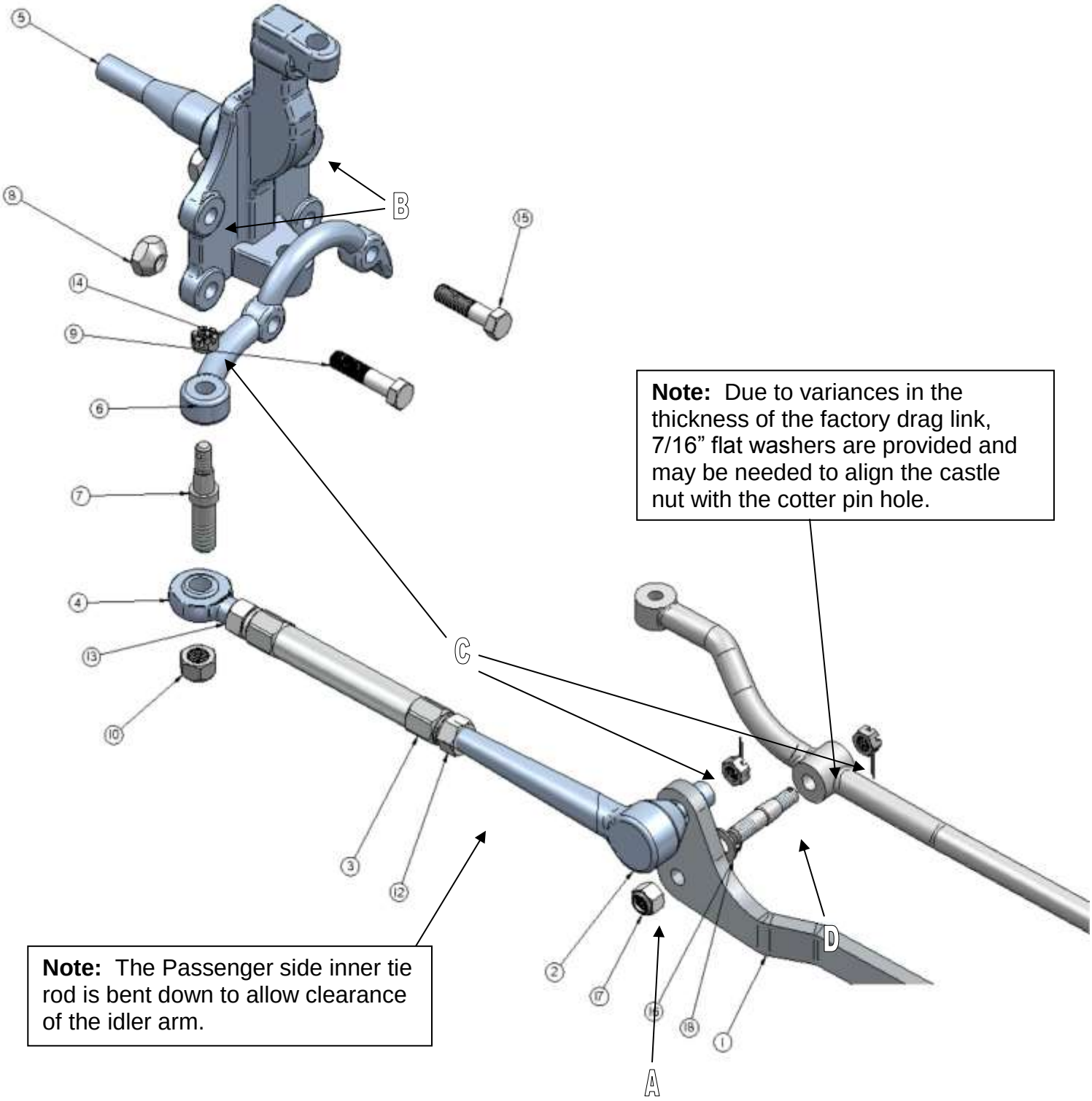

Note: Due to variances in the thickness of the factory drag link, 7/16” flat washers are provided and may be needed to align the castle nut with the cotter pin hole.

Note: The Passenger side inner tie rod is bent down to allow clearance of the idler arm.

350 S. St. Charles St. Jasper, In. 47546
Ph. 812.482.2932 Fax 812.634.6632
www.ridetech.com

Note: If using a factory style stamped caliper bracket, the bracket may need to be trimmed. The dust shield may also need to be modified.

NOTE: ON OUR CAR WE RUN A 275/40R18 ON AN 18 X 10 WHEEL WITH A 5.750" BACKSPACING, HOWEVER DO TO DIFFERENT BRAKE PACKAGES; YOU NEED TO MEASURE YOUR CAR TO VARIFY WHEEL FITMENT

350 S. St. Charles St. Jasper, In. 47546
Ph. 812.482.2932 Fax 812.634.6632
www.ridetech.com

Part # 11169100
67-69 GM "F" Body & 68-74 GM "X" Body Front MuscleBar w/ PosiLinks

Components:

1	90000116	Sway bar	
1	90000121	Driver side arm	
1	90000122	Passenger side arm	
2	90000137	Frame bracket	
2	90001099	Polyurethane frame bushing	
2	90000924	10mm straight PosiLink	
2	90000926	10mm 90 degree PosiLink	
4	90000717	T-bushings	
2	99250001	Grease Zerk fittings – ¼"-20	
2	90001092	Tube of lithium grease	
2	99115001	10 x 1.5 x 36mm stud	In PosiLinks (use Loc-tite)

Hardware Kit: 99010044

4	99112002	10mm Nylok nut	PosiLinks
2	99373003	3/8" SAE flat washer	PosiLinks
4	99311001	5/16" x 1" USS SHCS	Frame bracket
4	99312003	5/16" USS Nylok nut	Frame bracket
8	99313002	5/16" SAE flat washer	Frame bracket
6	99371021	3/8"-16 x 1" FHSCS	Arm to sway bar (Use Loc-tite)
2	99502003	½" SAE Nylok jam nut	Steering arm

MUSCLEbar™
by Air Ride Technologies
POSI•Link™

11169100 Installation Instructions

1. This sway bar is designed for use with our lower StrongArms. Installation on other arms may require modification.

2. Remove the end links from the factory sway bar. Then remove the bolts attaching the sway bar to the frame.

3. On some cars, the compression stop bracket that is welded to the frame will need to be removed to allow clearance for the sway bar arm.

3. On some cars, the compression stop bracket that is welded to the frame will need to be removed to allow clearance for the sway bar arm.

4. Apply lithium grease to the poly bushing then slide it over the sway bar.

5. Secure the sway bar to the frame with two 5/16” x 1” Socket Head Cap Screws, flat washers and Nylok nuts.

Note: Due to the larger diameter bar, the front hole must be drilled with a 5/16 bit, in front of the factory hole. Use the bracket as a template.

6. On some cars clearance of the cross member may be needed for sway bar clearance.
.

7. Attach the arm to the bar using three 3/8” x 1” Flat Head Cap Screws. **Blue or Green Loc-tite must be applied to the threads of these bolts.**

Note: With the Arms installed, the lower portion of the MuscleBar should be towards the ground. If it is pointing toward the front of the car, remove the bar a flip it end for end and reinstall the bar and arms.

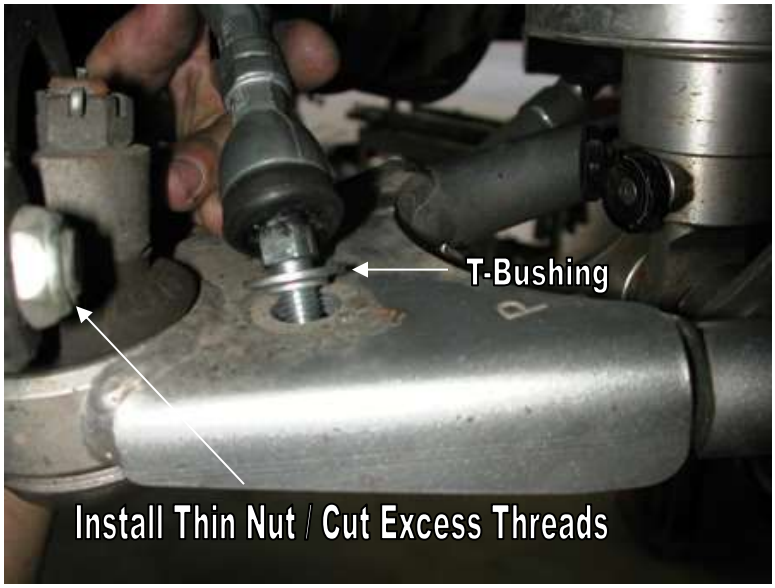

8. The straight end of the PosiLink will attach to the lower control arm. **A “T”-Bushing must be installed on each side of the control arm.** Secure the assembly with a 10mm Nylok nut.

Note: To avoid the front steering arm bolt hitting the PosiLink, a thin Nylok jam nut is installed and the excess threads must be cut off.

9. Attach the other end of the PosiLink to the sway bar arm with a 3/8” flat washer and a 10mm Nylok nut.

10. Check sway bar and PosiLink clearance through full suspension travel, turning the wheel lock to lock. Make sure that the PosiLinks do not bind.

350 S. St. Charles St. Jasper, In. 47546
Ph. 812.482.2932 Fax 812.634.6632
www.ridetech.com

Part # 11167199
67-69 GM "F" Body AirBar

Components:

1	90000527	Upper cradle assembly
1	90002077	Lower axle bracket - Driver
1	90002078	Lower axle bracket - Passenger
2	90001624	Lower billet Shockwave mount
2	90001617	Lower Shockwave stud - .625"
4	90002067	Aluminum spacer – lower shock bearing
2	90000144	Axle tabs (Short Tab-Inside)
2	90000524	Axle tabs (Tall Tab-Outside)
2	90000523	Shock block off plate
2	90001001	Upper bars – TW 7.375" (C-C length 9.250")
1	90001029	Lower bar – WW 24.75" – Passenger side
1	90002328	Lower bar – WW24.75" – Driver side
2	99250001	¼"-28 straight grease fitting
2	90001589	Threaded Kevlar lined Heim end
4	90000552	Aluminum spacers for Heim end
2	99752004	¾" SAE jam nut – for rod end
4	90001942	Rubber bushings – pressed into bars
4	90001090	Poly bushing for lower bar
2	90000526	Inner bushing sleeve – lower bar
2	90001844	Trunk backer plate for sway bar bracket
2	70010694	Jig brackets for upper bar installation
2	90001107	Front Tab Backer

Hardware Kit # 99010017:

2	1/2"-13 x 1 ¼" Gr.5 bolt	Billet mount to axle bracket
2	1/2"-13 x 1 ¾" Gr.5 bolt	Billet mount to axle bracket
4	1/2"-13 Nylok nut	Billet mount to axle bracket
6	5/8"-11 x 2 ¾" Gr.5 bolt	Bar ends
6	5/8"-11 Nylok jam nut	Bar ends
2	1/2"-13 x 2 ¼" Gr.5 bolt	Upper Shockwave mount
2	1/2"-13 Nylok jam nut	Upper Shockwave mount
18	3/8"-16 x 1" Thread forming bolt	Upper cradle assembly
30	3/8" SAE flat washer	Upper cradle assembly/Front cradle backer
8	7/16"-20 Nylok nut	T bolts for lower axle mount
8	3/8"-16 x 1 ¼" Gr.5 bolt	Trunk backer plate for sway bar bracket
8	3/8"-16 Nylok nut	Trunk backer plate for sway bar bracket/Front cradle backer
2	3/8"-16 x ¾" Gr. 5 bolt	Upper bar installation jig
2	3/8"-16 nut	Upper bar installation jig

1. Raise the vehicle to a safe and comfortable working height. Use jack stands to support the vehicle with the suspension hanging freely.

2. Support the axle and remove the leaf springs, shocks and tail pipes. Refer to the factory service manual for proper disassemble procedures. Keep the factory upper shock bolts, bump stop bolts, U-bolts, and front leaf spring mount and bolts.

1. To allow maximum drop, the factory pinion snubber must be removed. For a clean cut use a cut off wheel and smooth any burrs.

1. Lower the axle enough to slide the upper cradle into place. On most cars the location of the cradle will index off of the factory bump stop bolt hole. If your car has the bump stop beside the frame, slide the cradle forward until the front tube touches the body.

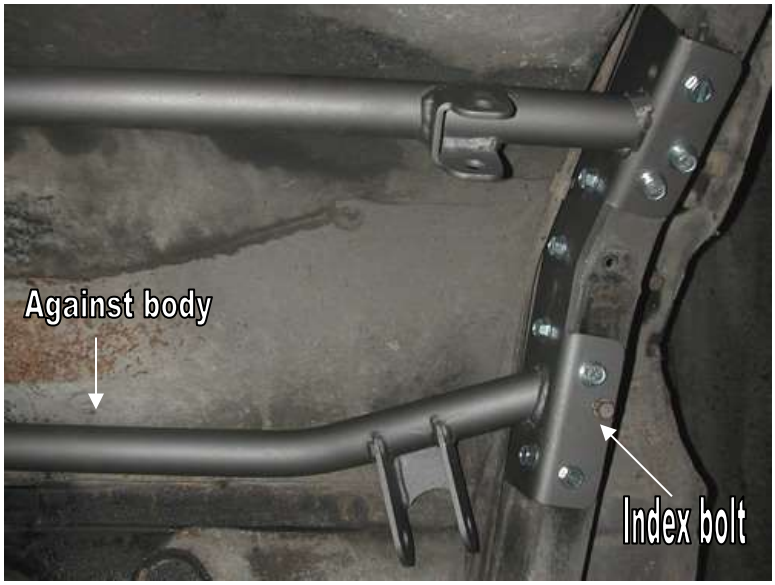

3. A series of self-tapping 3/8” bolts are used to hold the cradle in place. First drill the holes with a 5/16” bit and then thread the bolts into the frame.

Note: Newer cradles will have a sway bar bracket welded to the upper cradle. The will attach to the trunk pan with a 3/8” x 1 ¼” bolt and Nylok nut. A backer plate is supplied to be installed inside the trunk.

4. The two forward tabs grab the pinch weld and have a backer plate on the inside of the car under the back seat. These are attached using (6) 3/8” x 1 ¼” bolts washers and Nylok nuts.

Note: Newer cradles will have a sway bar bracket welded to the upper cradle. The will attach to the trunk pan with a 3/8” x 1 ¼” bolt and Nylok nut. A backer plate is supplied to be installed inside the trunk.

5. Install the large end of the lower bar (the long one) into the factory spring mount using the factory hardware. The bar is offset to the inside of the car to allow for tire clearance. Do not over tighten this bolt; it should be snug.

6. This bushing is polyurethane and is lubricated at the factory with lithium grease. Future lubrication can be done using any non-petroleum based lubricant.

7. Bolt the bar and mount back onto the car using the factory hardware.

8. The lower axle bracket will be fastened to the leaf spring pad using the factory T-bolts. The bar mount is offset to the inside of the car to provide more wheel and tire clearance. New 7/16” nylocs are supplied.

9. Bolt the lower Shockwave mount to the lower holes of the axle bracket if you have a monoleaf car. If you have a multileaf car the bottom of the billet mount will be flush with the axle bracket.

10. Swing the lower bar up to the axle bracket and insert 5/8” x 2 3/4" bolt. The standard hole is the center hole like in the picture. Thread 5/8” Nylok onto the bolt but **do not tighten** yet.

11. This end of the bar as well as the upper bars are rubber and do not require lubrication.

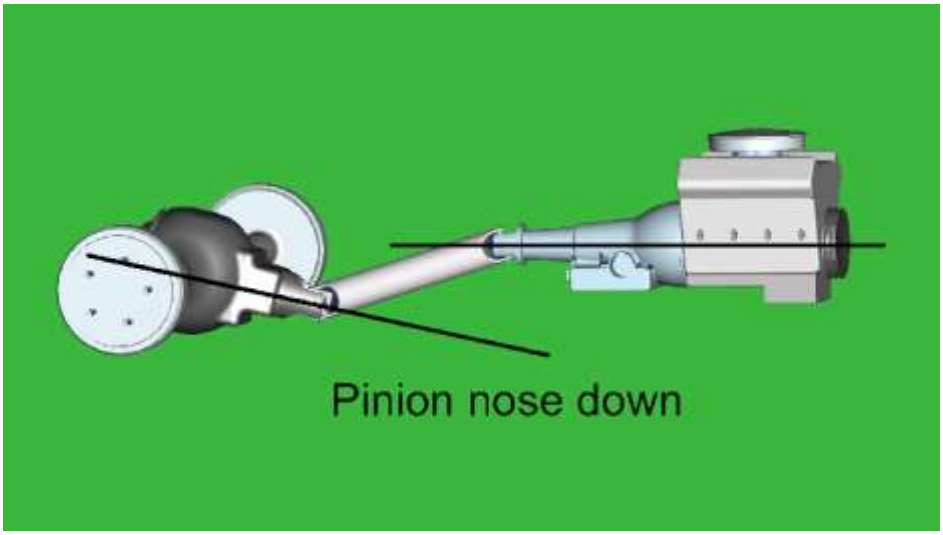

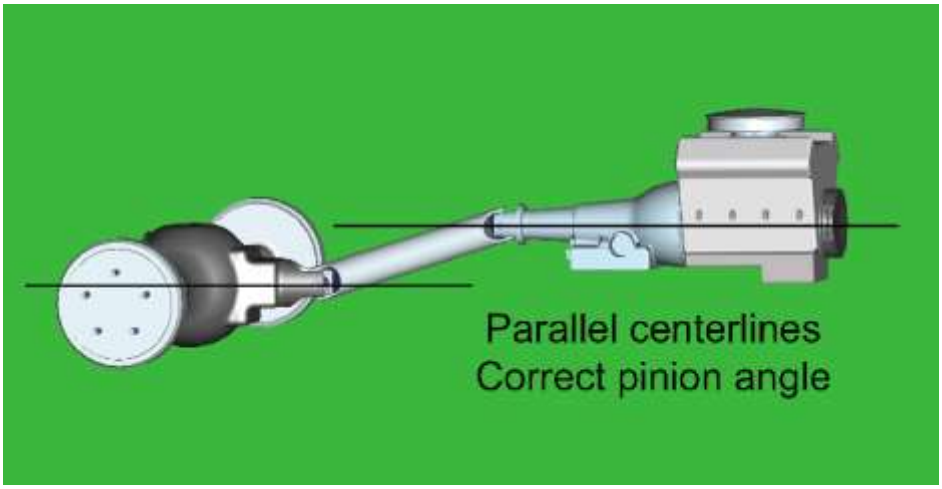

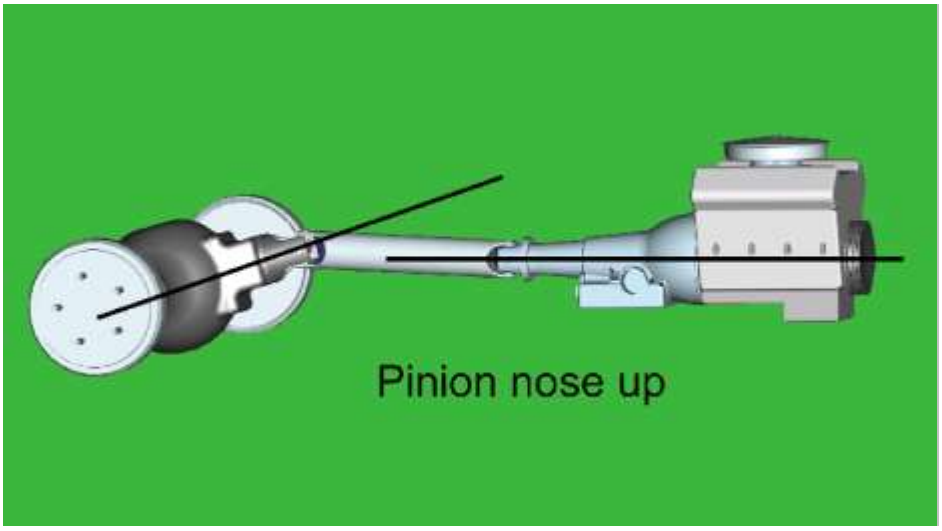

12. How do you set the pinion angle? On a single-piece shaft you want to set it up where a line drawn through the center of the engine crankshaft or output shaft of the transmission and a line drawn through the center of the pinion are parallel to each other but not the same line.

A simple way to do this is to place a digital angle finder or dial level on the front face of the lower engine pulley or harmonic balancer. This will give you a reading that is 90 degrees to the crank or output shaft unless you have real problems with your balancer. At the other end, you can place the same level or angle finder against the front face of the pinion yoke that is also at 90 degrees to the centerline. If you rotate the yoke up or down so both angles match, you have perfect alignment.

Road testing will tell you if you have it right. If you accelerate and you get or increase a vibration, then the pinion yoke is too HIGH. Rotate it downward in small increments of a degree or two until the problem goes away. If you get or increase a vibration when decelerating, then the pinion yoke is too LOW. Rotate it upward to correct it.

Upper Bar Installation Jig

- This jig has been supplied to aid in the installation of the upper 4 link bar. It can be <u>temporarily</u> used to properly align, locate and weld the tabs onto the axle. It will also ensure that the mounting bolts are parallel to the ground.
- Follow the diagram below to set the jig to the same length as the upper bar, use the 3/8” x 3/4” bolt and nuts to set the length.
- Position the axle at ride height. Center the axle left to right between the quarter panels. Set pinion angle.
- Bolt one end of the jig to the cradle using a 5/8” x 2 ¾” bolt.
- Using another 5/8” x 2 ¾” bolt, fasten the axle tabs to the other end. **The tall tab goes to the outside of the car with the long tail to the rear of the car. The short tab goes to the inside of the car with the long tail to the front of the car.** The tabs must be bolted to the **outside** of the jig.
- Swing the bar down letting the tabs rest onto the axle. Trim the brackets as necessary to minimize the gap to be welded.
- Check pinion angle, ride height and axle center. Tack-weld the tabs in place.
- Remove jig and install upper bar.
- Repeat this process for the other side.
- Recheck pinion angle, ride height and axle center. (Sound familiar?)
- After the tabs have been tack welded on both sides, remove the upper bars to avoid melting the rubber bushings. Let the axle drop down for better access to the tabs. Lay 1” welds on the inside and outside of the tabs. Skip around from one side to the other to avoid overheating the tube.

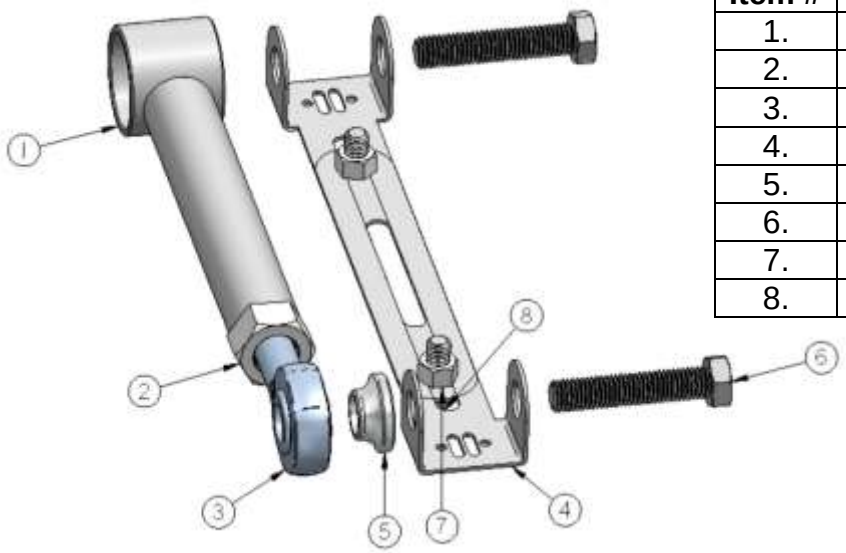

Item #	Description
1.	Upper bar
2.	3/4”-16 jam nut
3.	Heim end
4.	Alignment jig
5.	Aluminum spacer
6.	5/8”-11 x 2 ¾” bolt
7.	3/8”-16 nut
8.	3/8”-16 x 3/4" bolt

13. Check the length of the upper bar; it should be 9 ¼” C-C. Bolt the axle tabs to the setting jig as specified on the previous page. Then place the other end into the cradle. Both ends use a 5/8” x 2 3/4" and should not be fully tightened yet. For now just the let axle tabs sit on the axle.

14. Before welding these tabs to the axle you will need to center the axle and set pinion angle. We used a plum on the outside of the quarter panel to center the axle left to right. Setting the pinion angle is explained on a previous page. **This must be done at ride height.**

15. One helpful trick to help maintain ride height and pinion angle while adjusting is to tack weld a spacer between the axle and the outside of the frame as shown in the picture. This spacer should be 8 1/2” tall giving the Shockwave an eye-to-eye measurement of 14 1/2" to 15”.

16. After double-checking pinion angle, ride height, and axle center the tabs can be tack welded. Remove the bar to avoid frying the bushing and finish welding the tabs to the axle.

17. Apply thread sealant to the air fitting and screw it into the Shockwave.

18. Install the Shockwave or CoilOvers using the 1/2" x 2 1/4" bolt and Nylok nut on top and the 7/16” Nylok nut on the lower stud mount.

19. You can now go back and snug all of the Nylok nuts. This must be done at ride height.

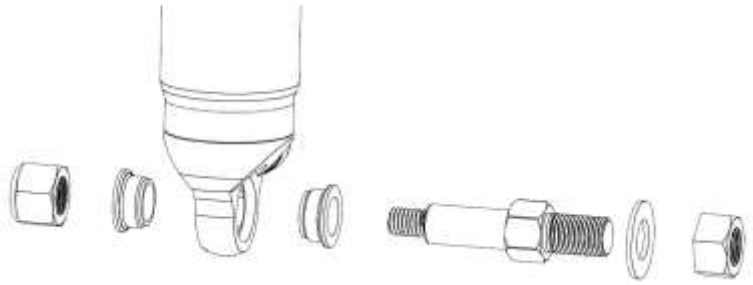

20. You can now remove the spacer from between the axle and frame.

21. We have supplied a plate to cover the factory shock holes. It will use the factory hardware.

22. The installation is complete but you want to check clearance of the brake lines, parking brake cables, vent tubes and exhaust. For the exhaust you can either install a turndown or reroute the exhaust under the axle. Stainless Works makes a tail pipe specific for use with the AirBar. 1-800-878-3635

23. This system is designed to be use with a Shockwave or CoilOver with a 14.5” ride height.

Should I weld my AirBar 4 link assembly in?

Since we get this question quite often, it deserves a proper explanation.
The AirBar has been designed for bolt-in installation. We have paid special attention to interfacing with key structural areas of each vehicle, fastening bracketry in at least two planes to properly distribute load paths, and to using appropriate fasteners that roll, rather than cut, threads into the vehicle structure.
Having said that, you could potentially encounter a vehicle that has rust or collision damage in these areas. Or maybe you intend to consistently place the vehicle in severe racing applications with sticky racing slicks and high speed corners. In these cases it is perfectly acceptable to weld the AirBar components into your vehicle. Even in these severe cases we recommend that you install the entire AirBar assembly first [including the fasteners], and then use short 1” long tack welds to secure your installation. Remember that the vehicle structure metal is typically much thinner [.060”-.120”] than the .188” thick AirBar brackets. If you burn through the vehicle sheet metal structure you may end up with an installation that is weaker than before you tried to weld it.
The other reason to weld in your AirBar assembly is…you simply want to. You’re a welding kind of guy…that’s the way you’ve always done it…you have the skills and equipment to do it. In that case…weld away with our blessing!

350 S. St. Charles St. Jasper, In. 47546
Ph. 812.482.2932 Fax 812.634.6632
www.ridetech.com

Part # 24350701
7000 TQ Series Shockwaves

Triple Adj. - 4” Diameter - 5” Stroke - .625” Bearing/.625” Bearing

Shockwave:

2	24359999	5” stroke TQ Series shock
2	24090799	7000 series Shockwave bellow assembly
2	90002024	1.7” Eyelet w/Adjuster knob
4	90001994	.625” I.D. bearing
8	90001995	Snap ring
2	70008913	Locking Ring

Components:

4	90002043	Bearing spacer kit
2	31954201	¼” npt x ¼” tube swivel elbow fitting
4	90002221	Reservoir Mount
12	99050000	4mm Socket Head Bolts
1	85000003	4mm Allen Wrench

SHOCKwave®
by Air Ride Technologies

7000 Series Shockwave

Use these spacers when mounting on 5/8" bolt.

Compressed Height	**11.5"**
Ride Height	**14.5"**
Extended Height	**16.5"**

Use these spacers when mounting on 1/2" bolt.

350 S. St. Charles St. Jasper, In. 47546
Ph. 812.482.2932 Fax 812.634.6632
www.ridetech.com

Part # 11169102
67-69 Camaro Rear MuscleBar

Components:

1	90001847	Sway bar assembly (3/4” Solid)	
2	90001846	Sway bar arms	
2	90001845	Axle mounting tabs	
2	90001843	Poly bushing mounting bracket	
2	90001979	Polyurethane bushing	
4	90000926	10mm 90 degree PosiLink	
2	90000114	3” PosiLink Spacer	
1	90001092	Tube of Lithium Grease	
2	99250001	¼” – 28 Straight grease fitting	
2	99115003	10mm x 115mm all thread	In PosiLink
2	90002275	Crush washer	In PosiLink

Hardware Kit: 99010045

4	99112002	10mm Nylok nut	PosiLink
12	99373003	3/8” SAE flat washer	PosiLink & bushing brackets
2	99371017	3/8” x 1” Button head	Poly bushing bracket (Front)
2	99371016	3/8” x ½” Button head	Poly bushing bracket (Rear)
4	99373005	3/8” lock washers	Poly bushing bracket
6	99311006	5/16”-24 x 1 ¼” Gr. 8 bolt	Arms to sway bar
6	99312001	5/16”-24 Nylok nut	Arms to sway bar
12	99313001	5/16 SAE flat washer	Arms to sway bar

POSI·Link™

11169102 Installation Instructions

Note: This sway bar was designed for use with our AirBar 4 link system. Installation with other suspension systems will require modification. Newer AirBars will already have the mounting brackets welded to the cradle. If installing on an older system the mounting brackets (Part # 11169192) will need to be purchased and welded on.

1. Bolt the sway bar arms to the bar using three 5/16" x 1 ¼" bolts, Nylok nuts and flat washers per side.

Note: The arms are ambidextrous, but should be mounted point outward toward the frame rail.

2. Lubricate the polyurethane bushing with the Lithium grease supplied and slide it over the bar. Then place the mounting bracket over the bushing.

3. Bolt the sway bar to the AirBar bridge. Use 3/8" x 1" Button heads on the front and 3/8" x ½" Button heads on the rear mounting holes with lock washers.

4. Position the axle to ride height, 14.5" from eye to eye on the Shockwaves/Coilovers. Then position the sway bar so that the arms are level to the ground.

5. Bolt one end of the PosiLink to the sway bar arm using a 3/8" washer and 10mm Nylok nut. Bolt the other end to the weld-on axle tab.

6. Swing the axle tab up to the axle and position it laterally until the PosiLink is vertical to the ground. Temporarily tack-weld the tab to the tube.

7. Swing the axle through full suspension travel checking sway bar clearance and ensuring that the PosiLinks do not bind.

8. Finish welding both sides of the axle tab to the tube with 1” welds, letting the weld cool between runs.

Installation complete!

ridetech
Air Ride Technologies

350 S. St. Charles St. Jasper, In. 47546
Ph. 812.482.2932 Fax 812.634.6632
www.ridetech.com

Part # 30314100
5 Gallon AirPod Compressor System
with RidePro Digital Controller

1	70010748	5 gallon AirPod
1	31398002	RidePro Digital Display
2	99064002	6-32 x 3/16” Phillips pan head screw for display
1	31900031	Display Harness
1	WIR	External power harness
1	90001924	Fuse holder
1	90001919	40 amp fuse
1	90001913	#10 Yellow butt connector
1	90001914	#10 5/16” eye connector
2	31940002	30’ roll of ¼” airline
4	31954201	¼”npt x ¼”airline fitting
1	Installation Guide	

airpod™
by Air Ride Technologies

Part # 30400034
4 Pack of LevelPro Height Sensors

4	31980002	Rotary height sensor
4	31980001	Linkage kit for height sensor
2	31900046	13’ height sensor cord
2	31900047	18’ height sensor cord
10	90002030	Heavy duty heat shrink tube - for rubber rod ends

ridetech
Air Ride Technologies

350 S. St. Charles St. Jasper, In. 47546
Ph. 812.482.2932 Fax 812.634.6632
www.ridetech.com

Part # 31008500
RidePro Digital Remote Control kit

1	31900039	Remote module
2	31900042	Key Fob
1	31900041	Antenna
1	31900001	Module to control panel USB cable