350 S. St. Charles St. Jasper, In. 47546
Ph. 812.482.2932 Fax 812.634.6632
www.ridetech.com

Part # 11300109
67-70 GM "B" Body Complete CoilOver System

Front Components:

1	11283509	Front Non-adjustable CoilOvers
1	11282899	Front Lower StrongArms
1	11283699	Front Upper StrongArms

Rear Components:

1	11306699	Rear Upper Strong Arms and Panhard bar
1	11284499	Rear Lower Strong Arms
1	11284799	Rear Coil Springs
1	11280709	Rear Non-Adjustable Shocks

350 S. St. Charles St. Jasper, In. 47546
Ph. 812.482.2932 Fax 812.634.6632
www.ridetech.com

Part # 11283509
65-70 Impala Non Adjustable Front CoilOvers
For Use w/ StrongArms

Shock Assembly:

2	24039999	3.6” stroke non adjustable shock
2	70008977	2.75” non adjustable threaded stud top
2	90001994	.625” I.D. bearing
4	90001995	Bearing snap ring

Components:

2	59080750	Coil spring – 8” long / 750 # rate
2	90002313	2.75” stud top base
2	90002222	Spring retainer kit (Do not use upper mount)
2	90002070	¾” Dropped upper mount
2	90001902	Aluminum cap for Delrin ball
2	90001903	Delrin ball upper half
2	90001904	Delrin ball lower half

Hardware:

2	99562003	9/16” SAE Nylok jam nut	Stud top hardware

COILover

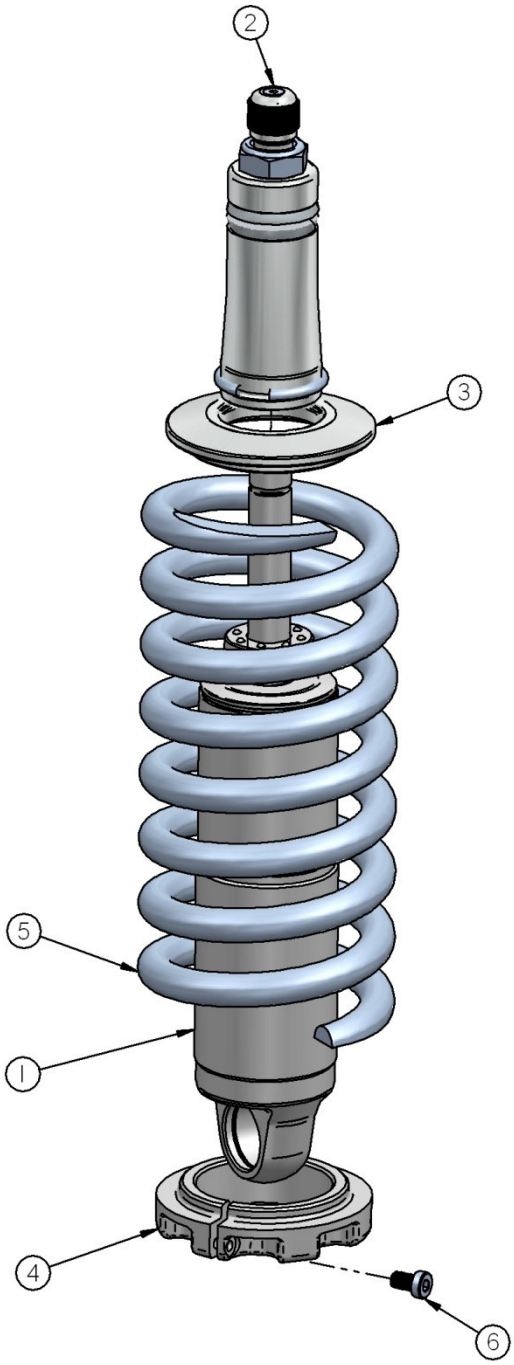

1. Impact Forged, Monotube shock
2. Rebound adjustment knob (SA Only)
3. Upper coil spring retainer (Use ¾” dropped cap.
4. Lower coil spring retainer
5. High tensile coil spring
6. Set screw

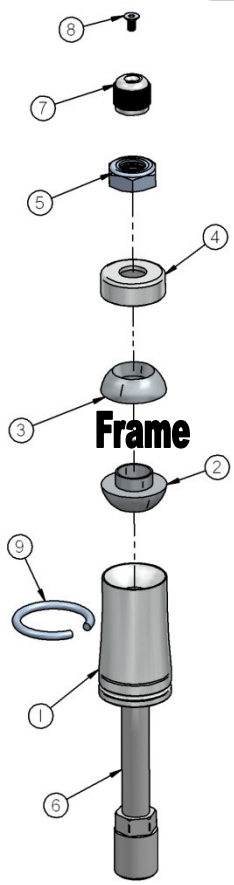

1. Stud top base
2. Lower Delrin ball half
3. Upper Delrin ball half
4. Aluminum cap
5. 9/16” Nylok jam nut
6. Threaded stud
7. Adjustment knob (SA Only)
8. Screw
9. Snap ring

COILover

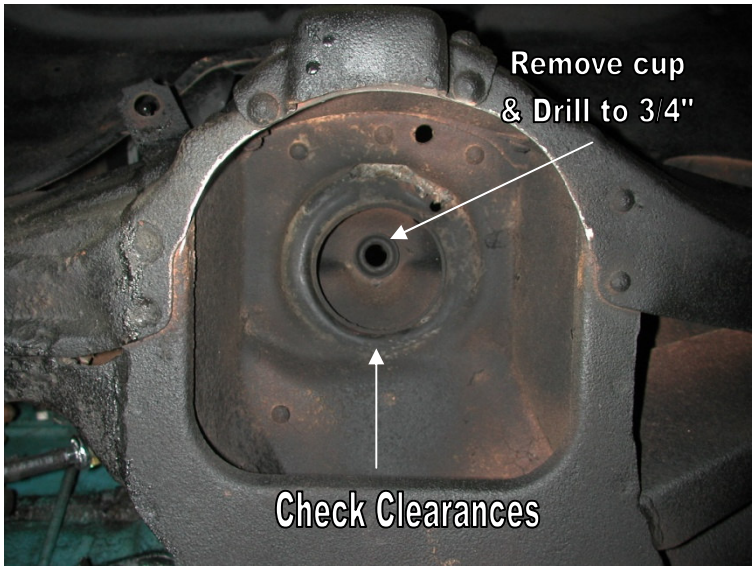

1. To allow the step in the lower Delrin ball half to slide into the factory shock hole, the bushing cup will need to be removed (if your car has one) and the hole may need to be drilled out to ¾".

2. Assemble the CoilOver then place into the coil spring pocket w/ the stud and lower Delrin ball sticking through the factory shock hole.

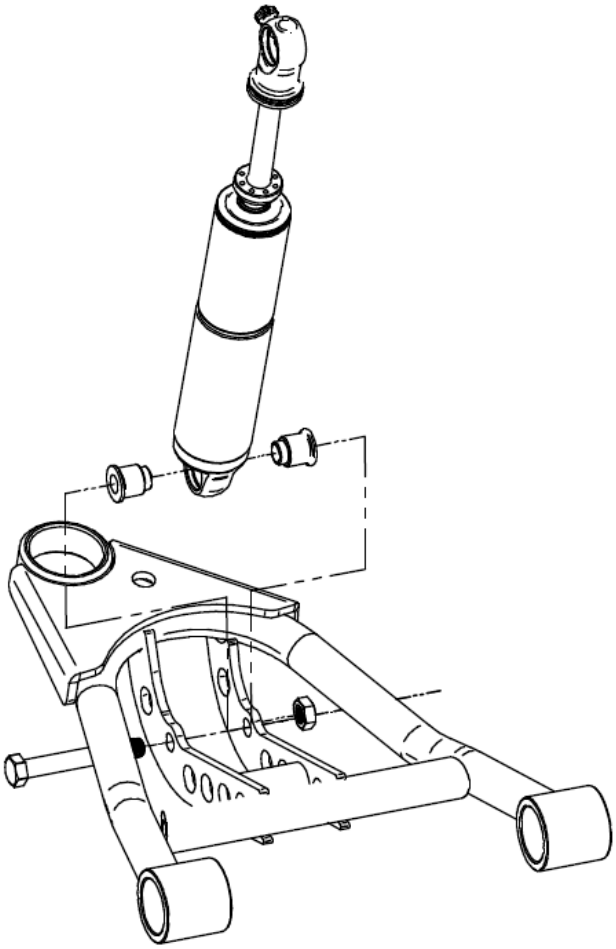

3. Check clearance between the upper factory spring retaining lip and stud top base. Allowing this to hit could cause the shock to break, this

4. Place the upper Delrin ball over stud, then the aluminum cap. Secure the assembly w/ the 9/16" Nylok jam nut.

5. Attach the bottom of the shock to the lower StrongArms using the spacers and hardware supplied w/ the arm.

Ride Height

We have designed most cars to have a ride height of about 2” lower than factory. To achieve the best ride quality & handling, the shock absorber needs to be at 40-60% overall travel when the car is at ride height. This will ensure that the shock will not bottom out or top out over even the largest bumps. Measuring the shock can be difficult, especially on some front suspensions. Measuring overall wheel travel is just as effective and can be much easier. Most cars will have 4-6” of overall wheel travel. One easy way to determine where you are at in wheel travel is to take a measurement from the fender lip (center of the wheel) to the ground. Then lift the car by the frame until the wheel is just touching the ground, re-measure. This will indicate how far you are from full extension of the shock. A minimum of 1.5” of extension travel (at the wheel) is needed to ensure that the shock does not top out. If you are more than 3” from full extension of the shock then you are in danger of bottoming out the shock absorber.

Adjusting Spring Height

When assembling the CoilOver, screw the spring retainer tight up to the spring (0 preload). After entire weight of car is on the wheels, jounce the suspension and roll the car forward and backward to alleviate suspension bind.

- If the car is too high w/ 0 preload then a smaller rate spring is required. Although threading the spring retainer down would lower the car, this could allow the spring to fall out of its seat when lifting the car by the frame.

- If the car is too low w/ 0 preload, then preload can then be added by threading the spring retainer up to achieve ride height. On 2.6” - 4” stroke shocks, up to 1.5” of preload is acceptable. On 5-7” stroke shocks, up to 2.5” of preload is acceptable. If more preload is needed to achieve ride height a stiffer spring rate is required. Too much preload may lead to coil bind, causing ride quality to suffer.

350 S. St. Charles St. Jasper, In. 47546
Ph. 812.482.2932 Fax 812.634.6632
www.ridetech.com

Part # 11282899
65-70 Impala Front Lower StrongArms
For use w/ Shockwaves or CoilOvers

Components:

1	90000093	Driver side lower arm
1	90000094	Passenger side lower arm
2	90000904	Ball joint (includes boot, grease fitting, castle nut & cotter pin)
2	90000928	Rubber bushing – pressed into arm
2	90001045	Control arm pivot bearing
2	90000734	Bearing housing
2	90000735	Bearing retaining plate
2	90000733	Aluminum bearing spacer
2	90000732	Bearing stud (Set to 3 1/16”)
4	90002062	Aluminum spacer – Shock to lower arm

Hardware:

2	99752001	¾”-16 Lock nut Gr.8	Pivot bearing
2	99752004	¾”-16 Jam nut	Pivot bearing
2	99753001	¾” Flat washer	Pivot bearing
6	99371018	3/8” x 1 ¼” SHCS	Pivot bearing
6	99373005	3/8” Lock washer	Pivot bearing
2	99501024	½”-13 x 3 ¼” Gr. 5 bolt	Shockwave to lower arm
2	99502001	½”-13 Nylok nut	Shockwave to lower arm
2	99371004	3/8” x 1 ¼” USS bolt	Steering stop
2	99372004	3/8” USS regular nut	Steering stop

STRONGARMS™
by Air Ride Technologies

Installation Instructions

1. Raise and support vehicle at a safe, comfortable working height. Let the front suspension hang freely.

2. Remove the coil spring, shock absorber, upper and lower control arms, sway bar and the strut rods. **There is a washer on each side of the lower control arm frame bushing, these will be reused. The factory lower control arm bolt will be reused as well.**

   Note: This kit is designed for use with our MuscleBar sway bar. It is easier to install it **before** the lower arms. The factory sway bar will not fit.

3. Bolt the lower StrongArm to the frame using the factory bolt. **Be sure to reinstall the T washers that came off the factory arm bushing.**
4. The front leg of the lower arm will attach to the frame in place of the strut rod. Refer to the diagram on the next page for assembly order.

Note: The hole in the frame may need to be buffed to allow bearing assembly to slide in.

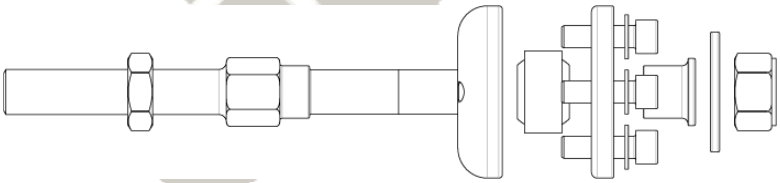

5. Using the bearing retainer as a template; drill three 3/8" holes in the frame to secure the assembly. Use three 3/8" x 1 ¼" SHCS and lock washers to secure the assembly.

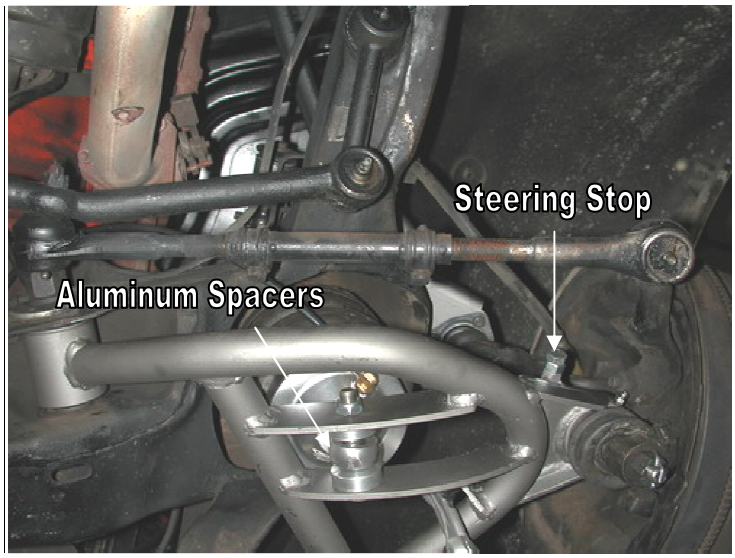

6. Attach the Shockwave to the lower control arm using a ½" x 3" bolt and Nylok jam nut. An aluminum spacer must be installed on each side of the bearing.

7. Two 3/8" x 1 ¼" bolts and nuts are supplied for the steering stop. They will bolt to the rear side of the ball joint plate. This can be adjusted to limit steering radius.

8. The Caster setting on this system has a lot of adjustment. We recommend setting it at 3-3.5 degrees.

9. Driving height pressure should be around 100psi. 6-8 clicks in the shocks will be a good starting point. This will vary to vehicle weight and driver preference.

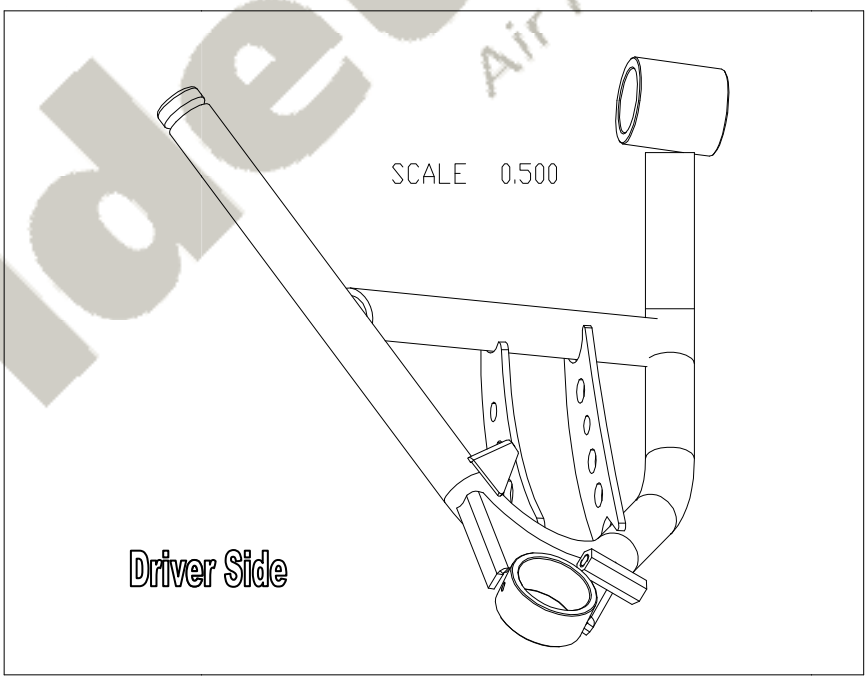

350 S. St. Charles St. Jasper, In. 47546
Ph. 812.482.2932 Fax 812.634.6632
www.ridetech.com

Part # 11283699
65-70 Impala Front Upper StrongArms

Components:

1	90000478	Driver side upper arm
1	90000479	Passenger side upper arm
2	90000905	Ball joint (includes boot, grease fitting, castle nut & cotter pin)
2	90000907	Bushing kit (4 pieces)
2	90000102	Cross shaft

Hardware:

4	99373005	3/8” Lock washer	Upper cross shaft
4	99371013	3/8” x 1” SAE bolt	Upper cross shaft
4	99373001	3/8” fender washer	Upper cross shaft

STRONG ARMS™
by Air Ride Technologies

Installation Instructions

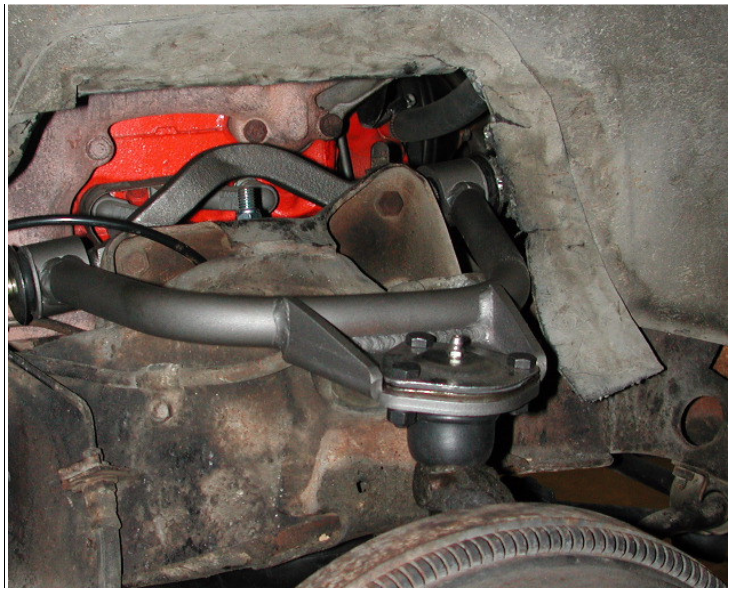

1. Drop the ball joint down through the ball joint plate, secure w/ the hardware supplied.

2. Fasten the upper arm to the frame using the factory hardware. Reinstall the current alignment shims, but **vehicle must be realigned.** This arm was designed with an extra 2 degrees of positive caster allowing the car to be aligned with up to 4 degrees of positive caster. (This will vary from car to car.)

Driver Side – Top View

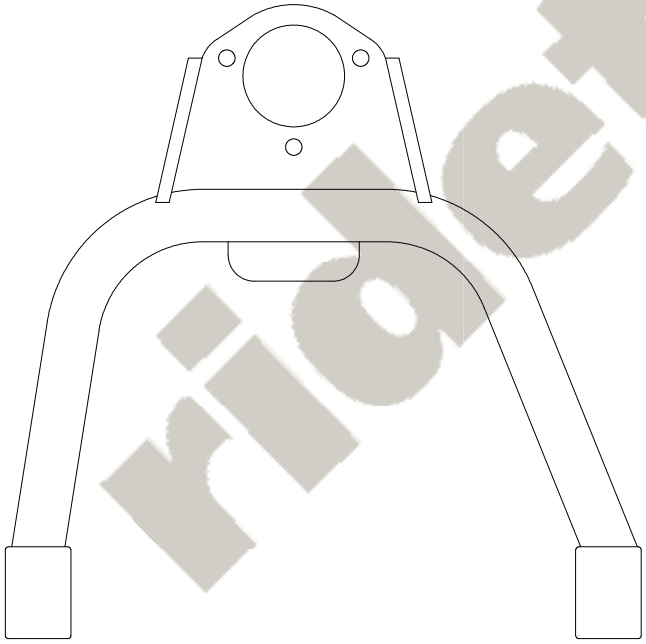

3. Insert the ball joint stud through the spindle and install new castle nut and cotter pin supplied.

4. Thread Zerk fitting into ball joint and grease.

5. Position the suspension at mid travel and then tighten the cross shaft nuts.

STRONG ARMS™
by Air Ride Technologies

Item #	Description	Qty.
1.	Passenger side arm	1
1.	Driver side arm	1
2.	Cross shaft	2
3.	Cross shaft bushing	4
4.	Ball joint	2
5.	5/16”-24 x 1” hex bolt	6
6.	5/16”-24 hex nut	6
7.	5/16” lock washer	6
8.	3/8”-24 x 1” hex bolt	4
9.	3/8” lock washer	4
10.	3/8” x 1.5” flat washer	4

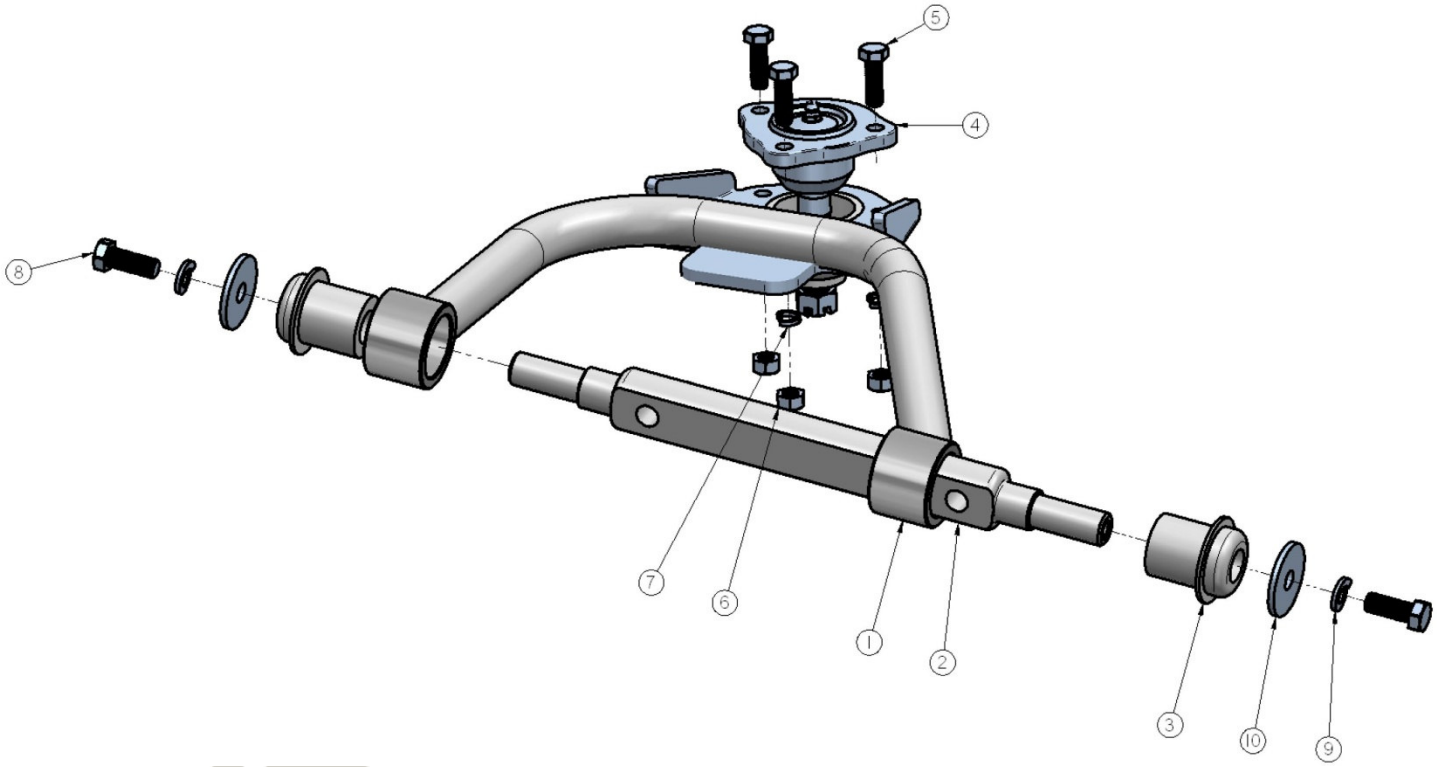

350 S. St. Charles St. Jasper, In. 47546
Ph. 812.482.2932 Fax 812.634.6632
www.ridetech.com

Part # 11306699
67-70 Impala Rear Upper StrongArm & Panhard Bar Kit

Upper Arm Components:

1	90001117	Upper StrongArm – C-C 10.00”
1	90001589	Kevlar lined Heim end - .75” thread x .625” I.D.
1	99752004	3/4”-16 SAE jam nut
2	90002066	Aluminum bearing spacer
1	90001085	Poly busing half
1	90001089	Poly busing half
1	90000722	Inner bushing sleeve - 2.625" long x .625" I.D x .75" O.D.

Panhard Bar Components:

1	90000998	Panhard bar – TW 33.875” (C-C 35.75”)
1	90001942	Rubber bushing – Pressed into panhard bar
1	90001946	Kevlar lined Heim end - .75” thread x .75” I.D.
1	99752004	3/4”-16 SAE jam nut
2	90000724	Aluminum T-bushing
1	90000461	Panhard bar axle stud

Hardware:

2	99621006	5/8” x 3 ¾” SAE Gr. 8 bolt	Upper arm
3	99632002	5/8” SAE Nylok jam nut	Upper arm / panhard bar stud
1	99561003	9/16” x 3” SAE Gr. 8 bolt	Panhard bar to frame
2	99562001	9/16” SAE Nylok jam nut	Panhard bar
1	99563001	9/16” USS flat washer	Panhard bar stud
1	99603003	5/8” USS flat washer	Panhard bar stud

STRONGARMS™
by Air Ride Technologies

Installation Instuctions

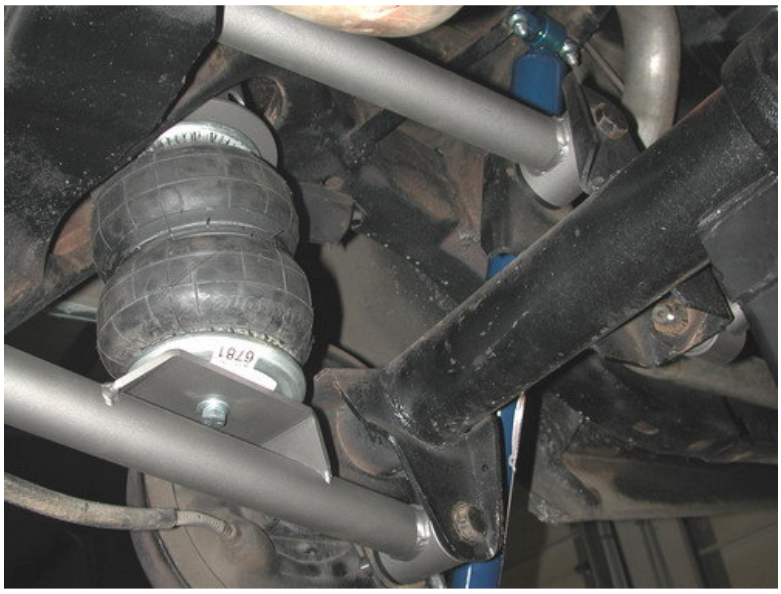

1. Replace the factory upper trailing arm with the StrongArms. 5/8” x 3 ¾” bolts and Nylok jam nuts are supplied to replace the factory hardware. An aluminum spacer will be installed on each side of the Heim end.

Note: Some cars may have two upper arms. In this case you will need to order a second upper arm, part # 11306698

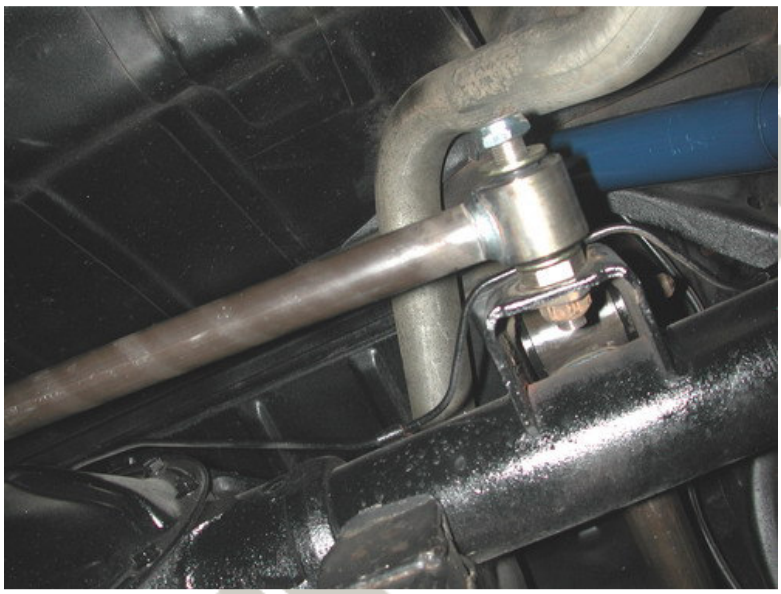

10. Replace the factory panhard bar with the new one using the new stud and hardware supplied. The rubber rod end will be attached to the axle.

Check air spring clearance through full suspension travel. Allowing the air spring to rub will result in failure and is not a warrantable situation.

11. The Heim end will attach to the frame using the 9/16” x 3” bolt and Nylok nut. Two aluminum T-bushings need to be installed on each side of the Heim end.

12. The panhard bar should be approximately 35 ¾” center eye to center eye, but may need adjusted to center the axle. This should be checked at ride height.

ridetech
Air Ride Technologies

350 S. St. Charles St. Jasper, In. 47546
Ph. 812.482.2932 Fax 812.634.6632
www.ridetech.com

Part # 11284499
65-70 Impala Rear Lower StrongArms
For use w/ CoolRide

Components:

2	90001027	Lower arm – WW 22.5”
4	90001085	Poly bushing half
2	90001089	Poly bushing half (Rear)
2	90001086	Poly bushing half (Front)
2	90000722	Inner bushing sleeve - 2.625" long x .625" I.D x .75" O.D. (Rear)
2	90000467	Inner bushing sleeve - 2.5" long x .625" I.D. x .75" O.D. (Front)
2	90001092	Tube of Lithium grease

Hardware:

4	99621006	5/8” x 3 ¾” SAE Gr. 8 bolt	Upper and lower arms
4	99632002	5/8” SAE Nylok jam nut	Upper and lower arms/panhard bar stud

Installation Instructions

1. Clean the bushing surfaces on the frame and axle brackets. Lubricate with the lithium grease supplied.

2. Fasten the StrongArm to the frame and axle using the 5/8” x 3 ¾” bolts and Nylok jam nuts supplied.

3. Fasten the air spring to the lower arm using a 3/8” x 3/4" bolt, flat washer and lock washer supplied w/ the air spring kit.

350 S. St. Charles St. Jasper, In. 47546
Ph. 812.482.2932 Fax 812.634.6632
www.ridetech.com

Part # 11284799
65-70 Impala Rear Coil Spring Kit

Components:

2	59130325	Coil spring – 13” free length, 5” O.D., 325# rate
2	90002079	Lower spring retainer

Hardware:

2	99371001	3/8” x 3/4" USS bolt	Spring retainer to lower arm
2	99373005	3/8” lock washer	Spring retainer to lower arm

350 S. St. Charles St. Jasper, In. 47546
Ph. 812.482.2932 Fax 812.634.6632
www.ridetech.com

1. Attach the spring retainer to the lower trailing arm using the 3/8” x 3/4" bolt and lock washer.

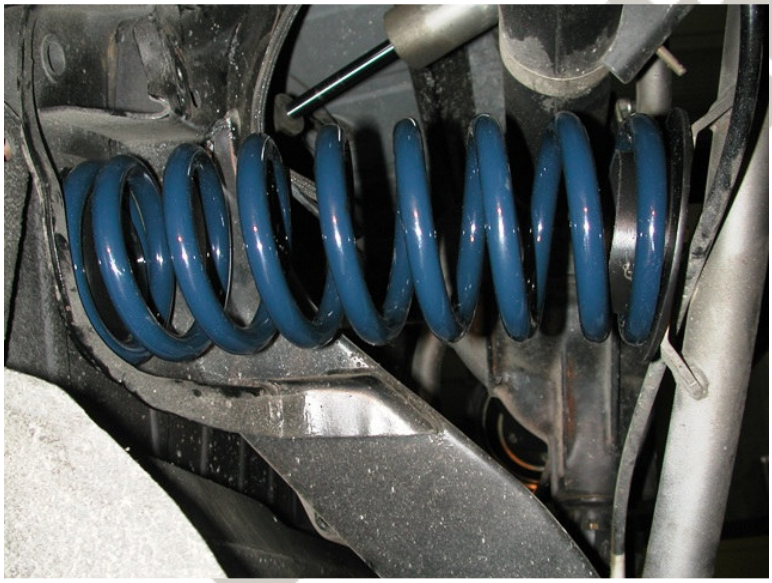

2. Support the axle, then remove the lower shock bolt. This will allow the axle to drop low enough to install the spring into the pockets.

350 S. St. Charles St. Jasper, In. 47546
Ph. 812.482.2932 Fax 812.634.6632
www.ridetech.com

Part # 11280709
65-70 Impala Master Series NA Rear Shock Kit

Components:

2	24079999	7” stroke Non Adjustable shock
2	90002021	1.7” NA eyelet
4	90001694	.625” bearing
8	90001995	Snap ring for bearing
2	90002010	Extended T-bar – Installed in shock body
4	90001980	Snap ring for T-bar
4	90002042	Aluminum bearing spacer - .625” I.D.
2	90001619	Round head cantilever pin
2	90000471	Aluminum spacer
4	90002067	Aluminum spacer for bearing

Hardware:

4	99371004	3/8” x 1 ¼” USS bolt	Shock to frame
8	99373003	3/8” SAE flat washer	Shock to frame
4	99372002	3/8” USS Nylok nut	Shock to frame

350 S. St. Charles St. Jasper, In. 47546
Ph. 812.482.2932 Fax 812.634.6632
www.ridetech.com

Installation Instructions

1. Fasten the upper shock T-bar to the bottom of the frame using two 5/16" x 1" bolts, Nylok nuts and flat washers.

2. Use the new cantilever pin supplied to attach the bottom of the shock to the axle.

1. Cantilever Pin
2. Aluminum Bearing Spacer
3. .625" Bearing
4. Aluminum Spacer
5. Factory axle bracket
6. ½" Lock Washer
7. ½" SAE Nut

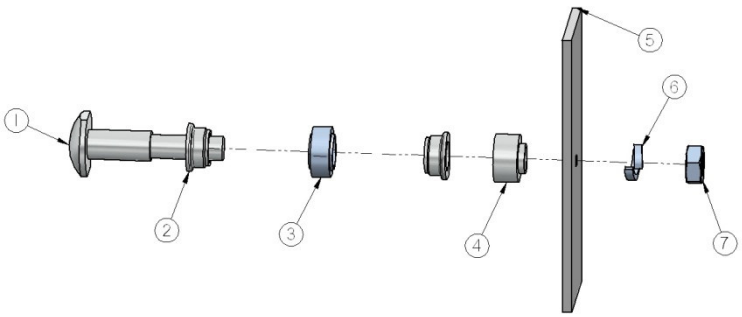

ridetech
Air Ride Technologies

COIL-OVER

In the box.....

Thank you for purchasing our product. In the box you will find the following components.

1- billet aluminum mono tube shock (241xx901)
1- Upper spring seat
1- Lower adjuster nut
Sold as pair (90002222)
1- Upper spring seat clip (90002057)
1- set of 5/8"-1/2" bearing spacer kit (90002044)

Assembly...

First using the supplied lower adjuster nut(90002222) thread the nut onto the shock from the bottom side as seen in figure 1

Next install coil spring over the top of the shock as seen in figure 2
NEED COILS? FLIP SHEET OVER

Before the upper spring mount can be installed screw the adjuster knob on the upper eye mount to the firmest setting (clockwise) as seen in figure 3.

Next slide the upper spring mount (90002222) over eyelet as seen in figure 4.

Install upper spring mount retainer clip (90002057) into the groove on the upper eyelet as seen in figure 5.

The included set of bearing spacers (900002044) are used to adapt the coil-overs to just about any application. The supplied spacers allow the coil-overs to accept 5/8" or 1/2" bolts.

Shock adjustment 101

How to adjust your new shocks. The rebound adjustment knob is located on the top of the shock absorber protruding from the eyelet. Begin with the shocks adjusted to the number 3 position. The first two settings are generally too soft for street use. The softest setting, is found by turning the knob in the counter-clockwise direction until the positive stop is located (this is setting #1). Rotating the knob in the clockwise direction increases damping stiffness. Each of the 24 settings is indicated by a detent that can be felt when turning the knob, and an audible click as the knob gently locks into position.

Take it on a drive....

Now if the car feels bouncy generally the vehicle will need a few more clicks (clockwise), again this will increase the stiffness of the shock.

Clockwise = Stiffer

Counterclockwise = Softer