ridetech

Installation Instructions

Part # 11560201- 1989-1996 C4 Corvette HQ CoilOver System

Kit Components:

11569500	Front Delrin Control Arm Bushing Kit
11563110	Front HQ CoilOvers
11569120	Front SwayBar
11566110	Rear HQ CoilOvers
11519122	Rear SwayBar

Recommended Tools

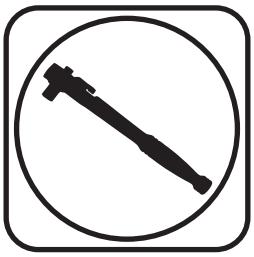

1989-1996 Corvette HQ CoilOver System

Installation Instructions

Table of contents

The Delrin Bushings, Front CoilOvers, and Front SwayBar should be installed in conjuntion with each other. Remove the transverse leaf spring while the control arms are removed from the car. Install the Front SwayBar while installing the Front Coilovers. Install the Rear SwayBar after installing the Rear CoilOvers.

www.ridetech.com
812-482-2932

ridetech

Installation Instructions

Part # 11569500 - 89-96 Corvette Delrin Bushing Kit

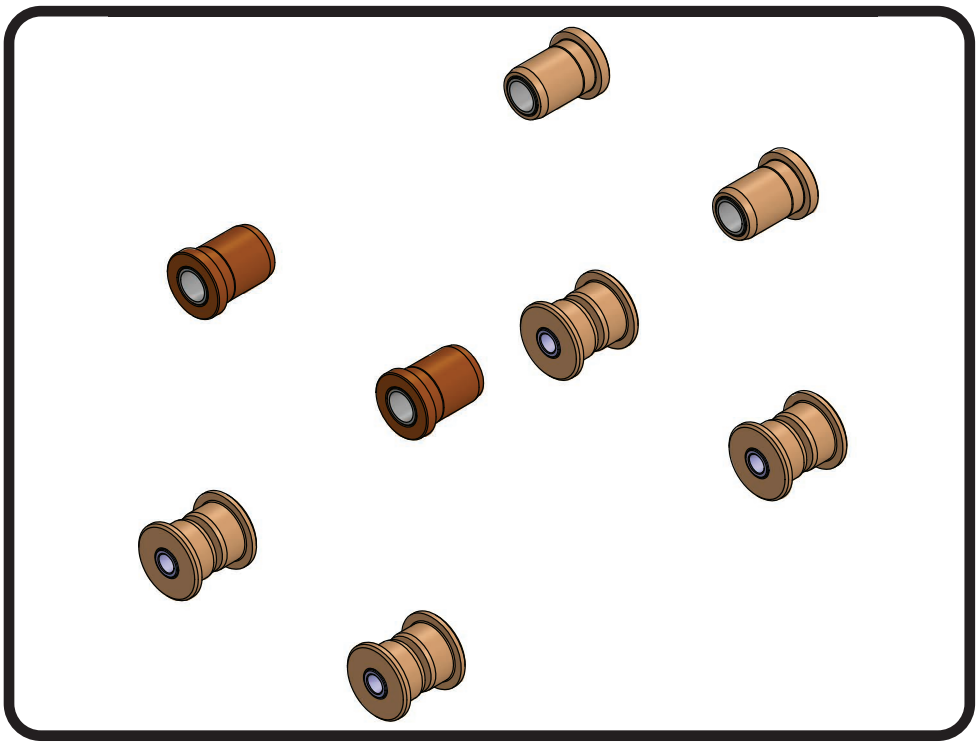

Recommended Tools

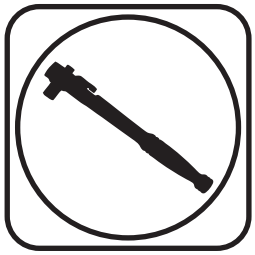

89-96 C4 Delrin Control Arm Bushing Kit

Installation Instructions

Table of contents

www.ridetech.com

Included Components .....In the box

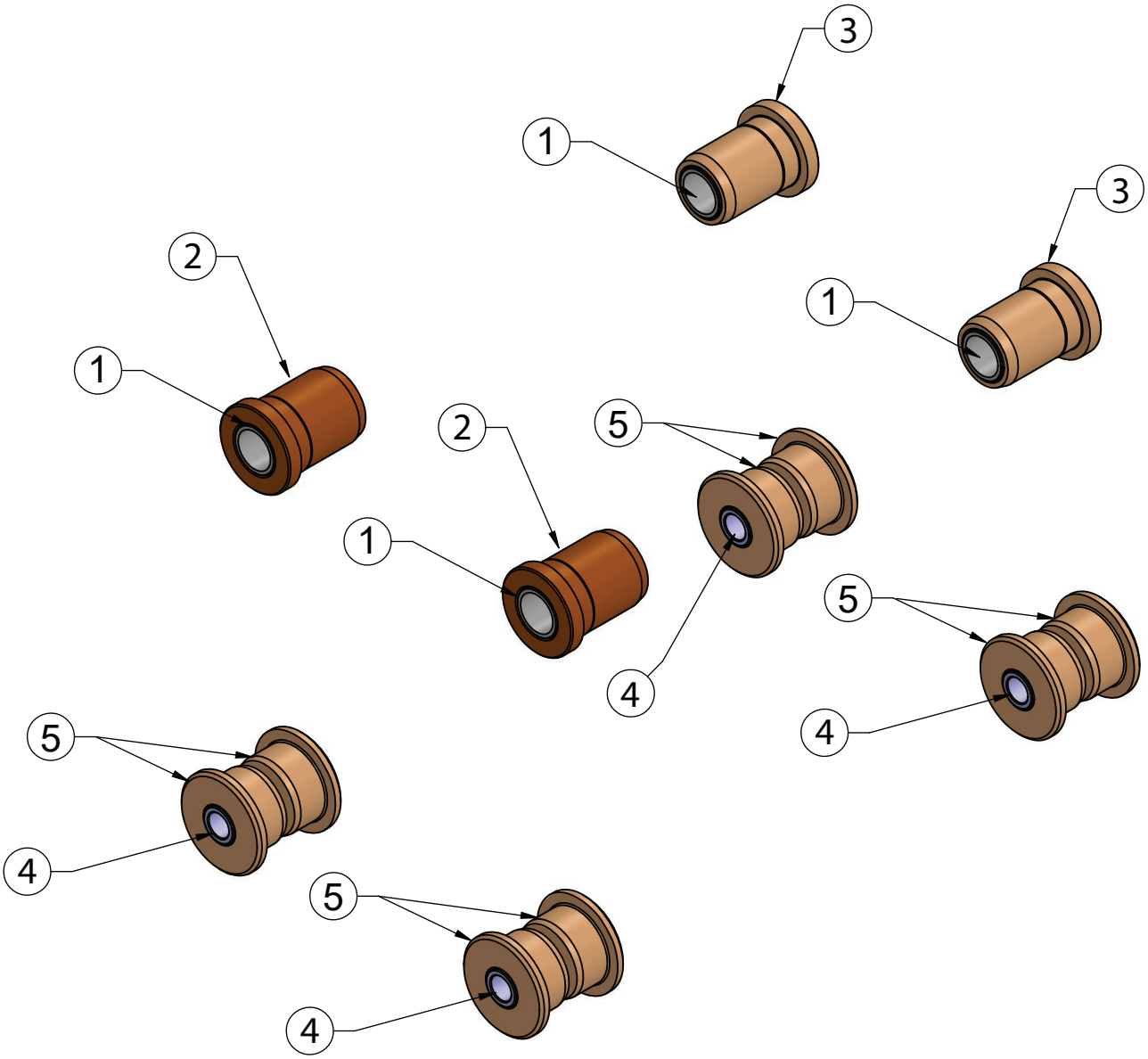

Item #	Part #	Description	QTY
1	90003108	Upper Inner Bushing Sleeve	4
2	70014075	Upper Forward Bushing	2
3	70014076	Upper Rear Bushing	2
4	90003109	Lower Inner Bushing Sleeve	4
5	70014082	Lower Bushing	8

Bushing & Sleeve Dimensions

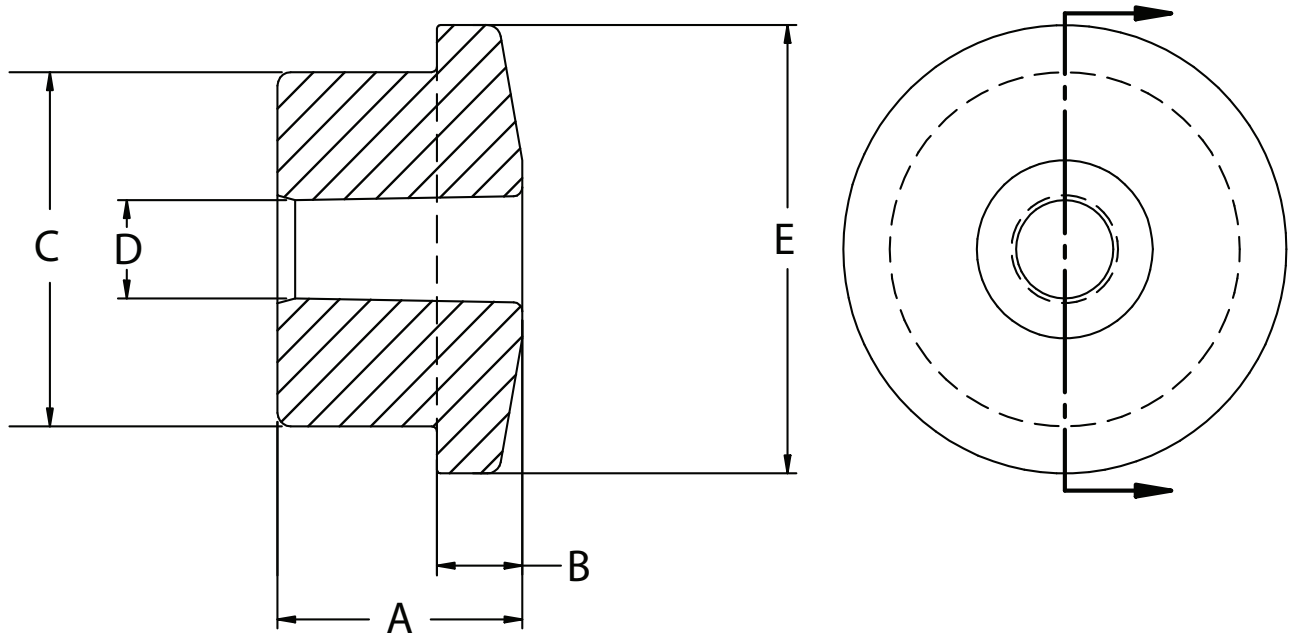

Bushing Dimensions

Item #	Part #	A	B	C	D	E
2	70014075	2.075	.295	1.471	.990	1.750
3	70014076	2.080	.295	1.345	.990	1.750
5	70014082	.940	.188	1.530	.740	2.00

Inner Sleeve Dimensions

Item #	Part #	OD	ID	Over All Length
1	90003108	.988″	.800″	2.105″
4	90003109	.739″	.500″	2.125″

Disassembly

Congratulations on your purchase of the Ridetech C4 Control Arm Delrin Bushing Kit. This kit has been designed to help improve your Corvette's handling along with providing a lifetime of enjoyment. The Delrin Bushing Kit will improve your cars handling characteristics by eliminating the deflection at the bushing.

1. We recommend doing one control arm at a time to simplify installation of the bushings.

2. Raise the vehicle and support it by the frame, allowing the suspension to hang freely.

3. With the wheels and tires removed, disconnect the shocks, and sway bar linkage from the lower control arms, retaining the hardware.

4. Support the Rotor Assembly when removing any of the control arms to prevent unnecessary strain on the brake lines and ABS sensor wires.

Disassembly

5. With the rotor and hub supported, remove the Front Upper Control Arm by , first removing the ball joint nut and using a ball joint separator to release the ball joint from the control arm.

6. Remove the access panel above the control arm. If doing an early C4, you will need to prop the hood up to remove the hood prop from the passenger side.

7. Next, remove the (2) nuts attaching the upper cross shaft to the car. Mark any shims that may be behind the cross shaft. You will need to put these back in the same location when reinstalling the control arm. You will have to push the upper mounting bolts toward the engine to remove the upper control arm.

Front Upper Bushing Removal

8. Remove the outer nuts and washers and retain them. Press the bushings out of the control arm. We used a "H" press to remove ours. Use the cross shaft to push the bushings out. Push out the bushing with the small inner washer first. After pushing it out, the large inner washer can be removed from the cross shaft to be able to push the remaining bushing out.

9. Once the Bushing Assembly is removed from the arm, prep the bushing opening by cleaning it to remove any debris that may be left in the opening. **Remove the inner washer from the cross shaft, they will NOT be reused.**

Front Upper Bushing Installation

10. Install the Inner Sleeve in the upper control arm bushings. You can tap it in with a hammer or use an arbor press. The front upper bushings are 2 different sizes with the front bushing being the larger of the 2. Make sure you have the correct bushings for the location.

Front Upper Bushing Installation

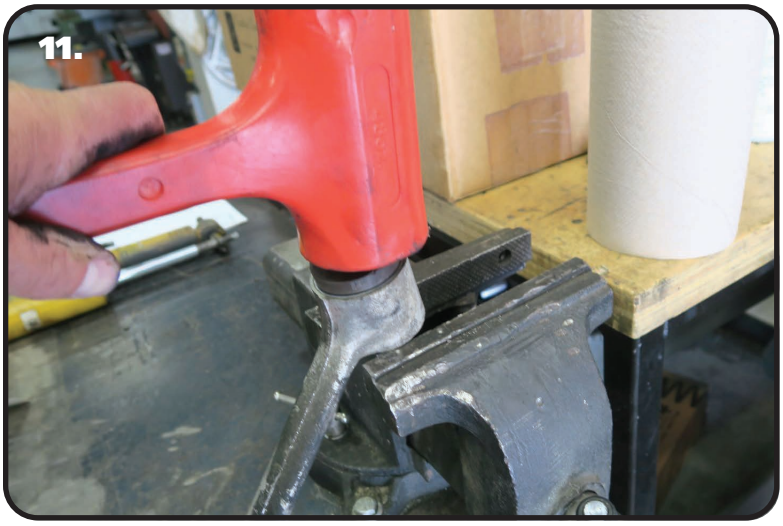

11. Tap the bushing/sleeve into the control arm. Support the inside of the control arm, but make sure the opening is large enough for the control arm bushings to pass through.

12. Insert the cross shaft through the side of the control arm that doesn't have a bushing installed.

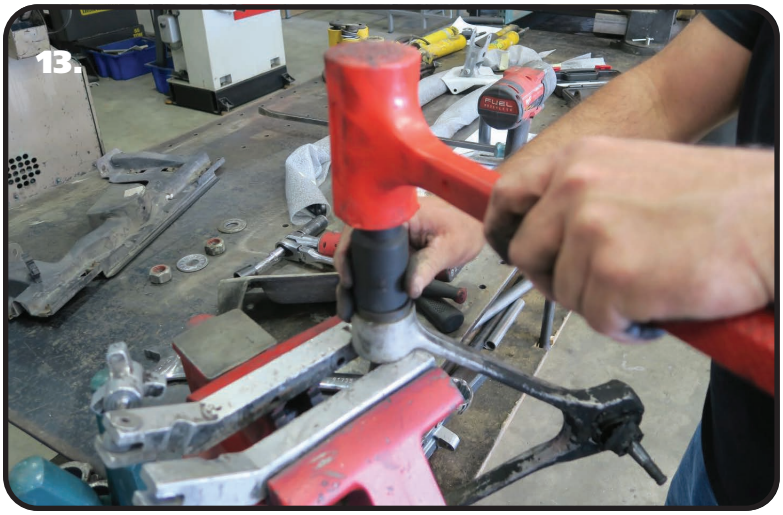

13. Tap the remaining bushing into the control. To do this, support the inside of the control arm. Again, make sure the opening is wide enough for the bushing to pass into it. We used a large deep well socket to tap the bushing in.

Control Arm Mounting Bolts Torque Spec:
48 ftlbs

Repeat on other side.

Front Upper Bushing Installation

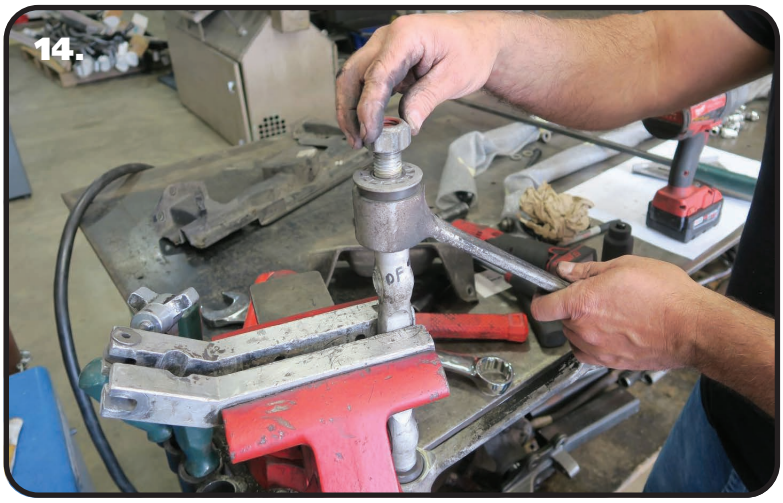

14. Reinstall the OEM outer washers and nuts. Torque the nuts 35-40 ftlbs.

15. Reinstall the upper control arm. Make sure the upper mounting bolts are seated in the frame. Reinstall the shims stacks that came out of the car. Torque the nuts to 37 ftlbs.

16. Insert the upper ball joint into the spindle. Reinstall the castle nut and torque to 33 ftlbs. Check alignment of the cotter pin hole. If it does not line up with an opening in the castle nut, tighten the nut until it does line up. Reinstall the cotter pin and bend the ends to keep it in place.

Repeat on other side.

Lower Control Arm Removal

17. The spring travel limiter will need to be removed. There are 2 vertical bolts and 2 horizontal bolts.

18. Later cars have a brace on the back side of the crossmember that will need to be removed to allow for removal of the rear control arm bolt. Remove the nuts from the lower control arm bolts to prepare for control arm removal.

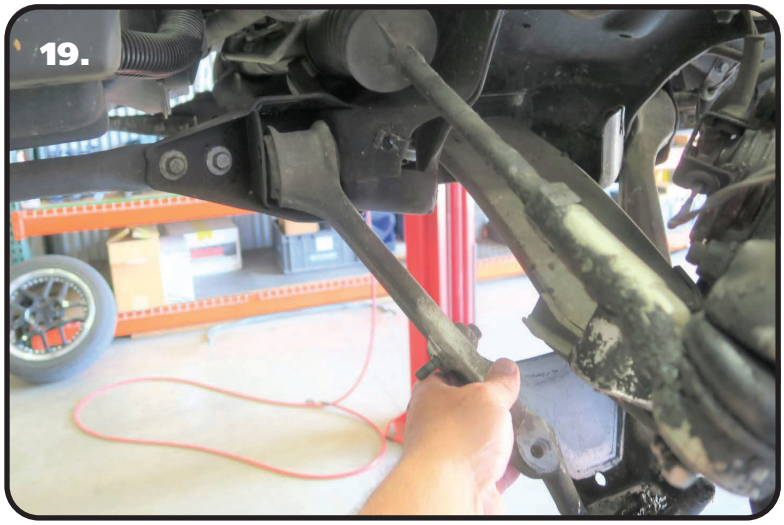

19. Support the hub/spindle and separate the ball joint from the spindle. With the ball joint separated, remove the control arm bolts and the control arm.

Lower Control Arm Bushing Installation

20. Press the bushings out of the control arm. We used a "H" press to remove ours. Once the Bushing Assembly is removed from the arm, prep the bushing opening by cleaning it to remove any debris that may be left in the opening.

21. Insert a bushing half in each opening of the control arm. The front and rear bushings are the same size.

22. Tap the bushings in until they are seated.

Lower Control Arm Bushing Installation

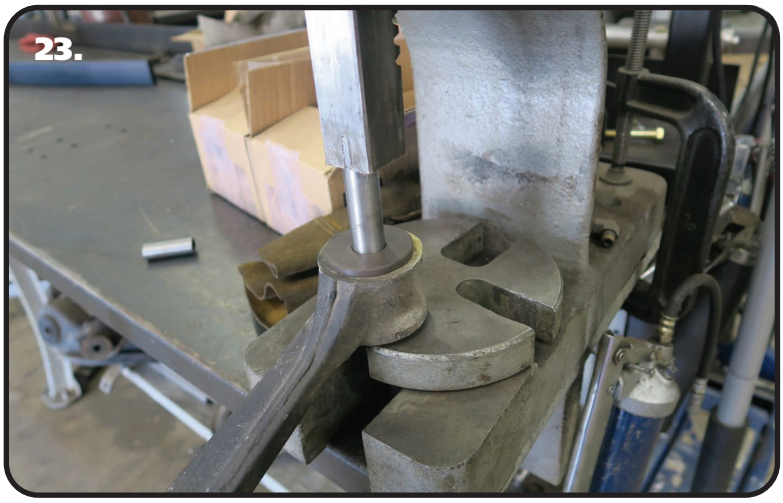

23. Push the inner sleeves into the Delrin bushings. We used an Arbor Press, but a bench vise will work for this.

NOTE: If you are installing Ridetech CoilOvers, remove the transverse leaf spring before reinstalling the lower control arms.

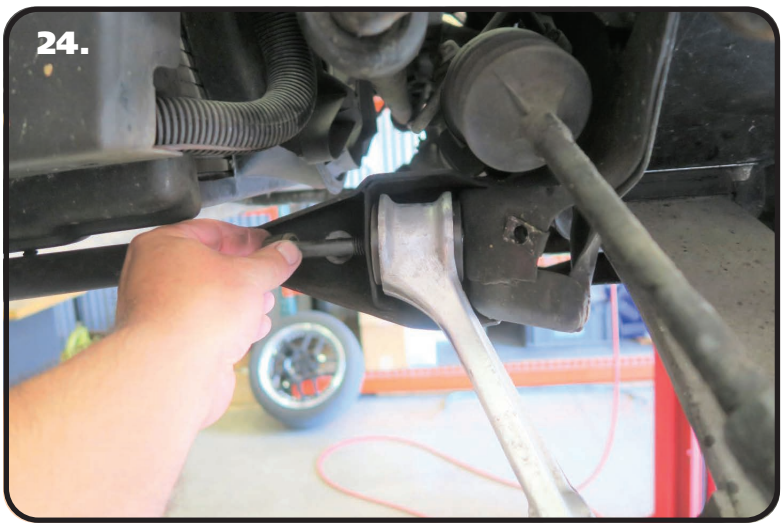

24. Reinstall the lower control arms in reverse order of how they were removed.

25. Insert the lower ball joint into the spindle. Reinstall the castle nut and torque to 50 ftlbs. Check alignment of the cotter pin hole. If it does not line up with an opening in the castle nut, tighten the nut until it does line up. Reinstall the cotter pin and bend the ends to keep it in place.

Finishing.....

26. Reinstall the spring travel limiter.

27. Reinstall the crossmember brace if working on a later model Corvette.

27. If you are installing Ridetech HQ Series Shocks and Sway Bars, refer to their instructions.

Anytime you change suspension components, have the car aligned!

ridetech

Installation Instructions

Part # 11563110 - 1989-1996 C4 HQ Front CoilOvers

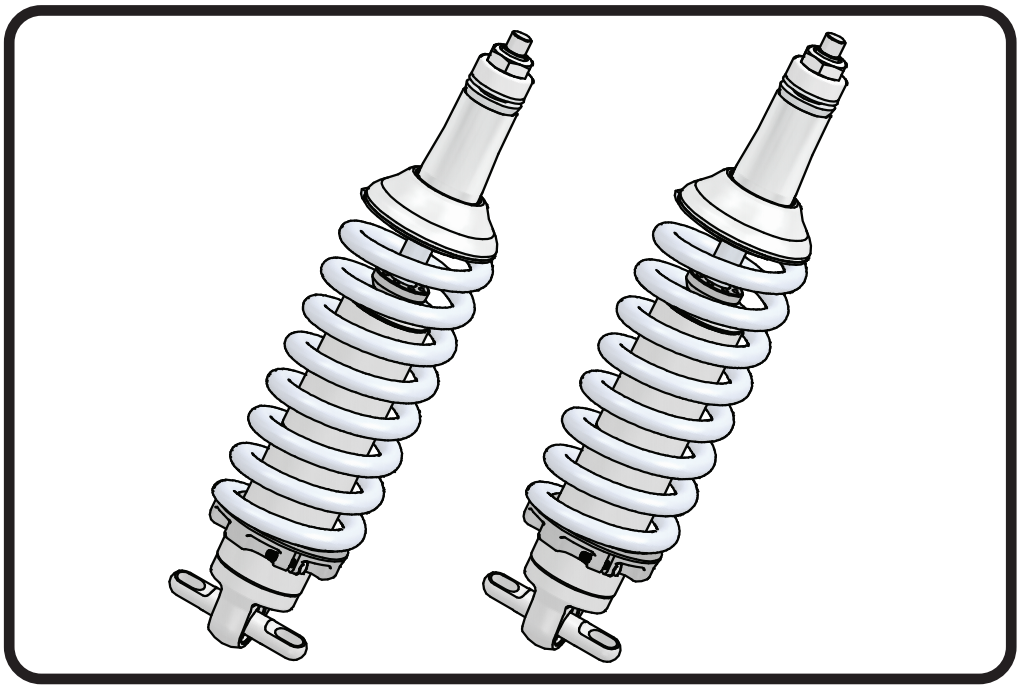

Recommended Tools

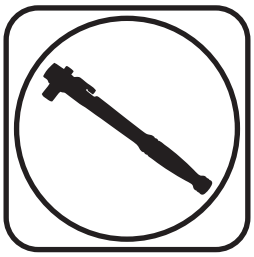

1989-1996 C4 Corvette HQ Series Front CoilOvers

Installation Instructions

Table of contents

This kit is Designed to replace the Factory Shocks and Transverse Leaf Spring Setup.

www.ridetech.com

Major Components .....In the box

Item #	Part #	Description	QTY
1	982-10-803	3.6" Stroke HQ Series Shock	2
2	90002060	Wide Trunnion	2
3	90001980	Trunnion Snap Ring	4
4	59080525	Coilspring 8" 525lb	2
5	70010828	Delrin Spring Washer	4
6	803-00-199(kit)	Lower Spring Adjuster Nut (803-00-199 kit)	2
7	803-00-199(kit)	Adjuster Nut Locking Screw (803-00-199 kit)	2
8	90002070	Upper CoilSpring Retaining Plate	2
9	803-00-199(kit)	CoilSpring Plate Retaining Ring (803-00-199 kit)	2
10	90009988(kit)	2.00" Stud Adjuster Assembly	2
11	90002312	2.00" Stud Top Base	2
12	90001904	Delrin Ball Lower Half	2
13	90001903	Delrin Ball Top Half	2
14	90001902	Delrin Ball Upper Cap	2
15	99562003	9/16-18" Nylok Nut	2
16	210-35-120-0	Shock Adjuster Knob	2
17	90009969	Adjuster Knob Retaining Screw	2
18	70012160	2" Stud Top Metering Rod	2
	90001994	5/8" ID Bearing (installed in shock body)	2
	90001995	Bearing Snap Ring (installed in shock body)	4

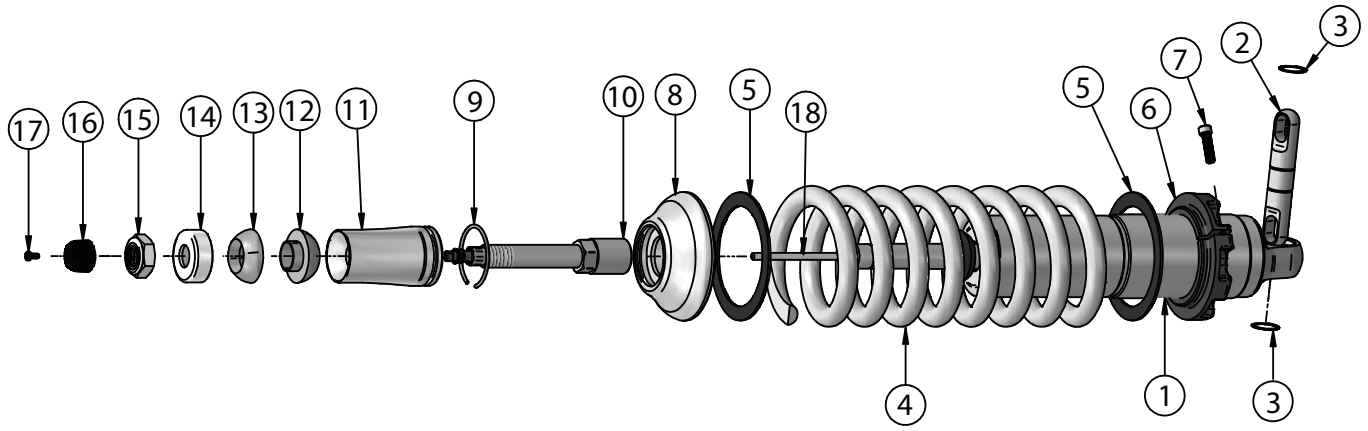

Getting Started & Disassembly

Congratulations on your purchase of the Ridetech C4 Front CoilOver System. This system has been designed to give your Corvette excellent handling along with a lifetime of enjoyment. The CoilOver System provides flexibility that can not be achieved with Leaf Springs. The CoilOver System will give you the flexibility of adjusting your ride height along with numerous spring options to dial in your ride quality to your personal preference.

This kit is Designed to replace the Factory Shocks and Transverse Leaf Spring Setup.

1. The front OEM Shocks and Leaf Spring will need to be removed from the front of the car.

2. Raise the vehicle and support it by the frame, allowing the suspension to hang freely.

3. Remove the shocks from both sides retaining the hardware.

4. Disconnect the front sway bar linkage from the lower control arm.

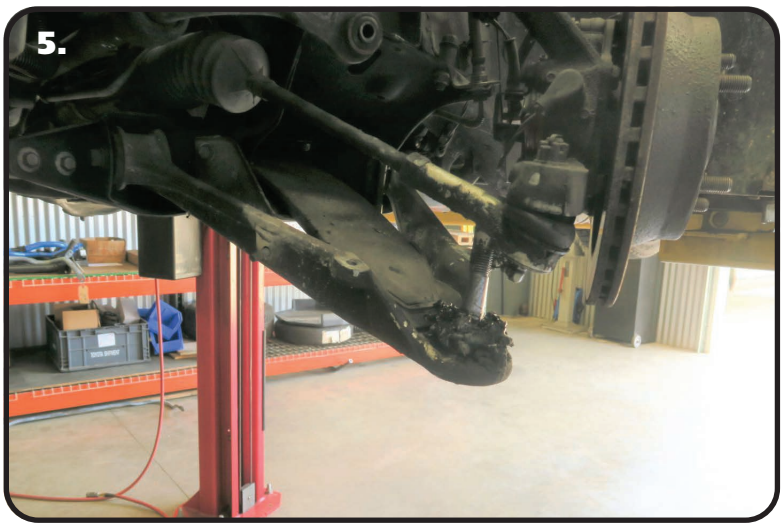

5. With the rotor and hub supported, disconnect the ball joint from the spindle. Remove the cotter pin from the nut/pin. Remove the ball joint nut and use a ball joint separator to release the ball joint from the spindle.

6. The spring travel limiter will need to be removed. There are 2 vertical bolts and 2 horizontal bolts. Use a jack to raise the lower control arm enough to remove the spring pressure from the spring travel limiter. After the limiter is removed, slowly lower the jack.

Disassembly

7. Remove the retaining nuts from the leaf spring mounting clamps.

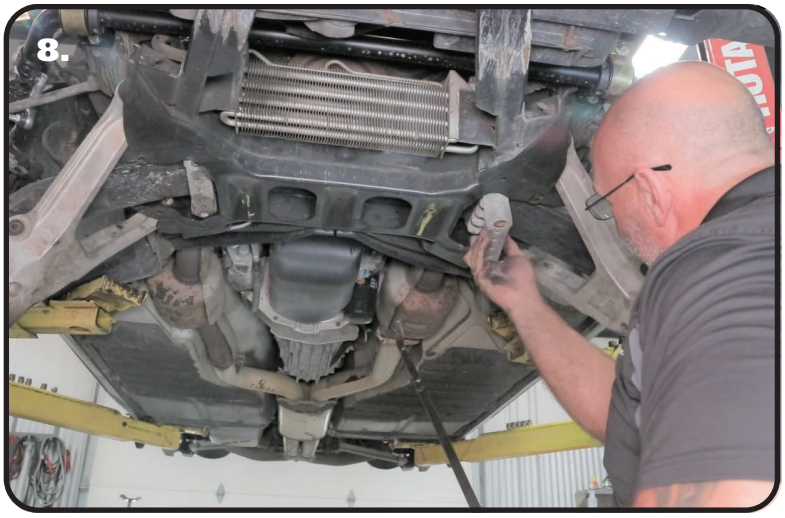

8. Remove the clamps from the leaf spring. You may have to pry these down, but do so evenly.

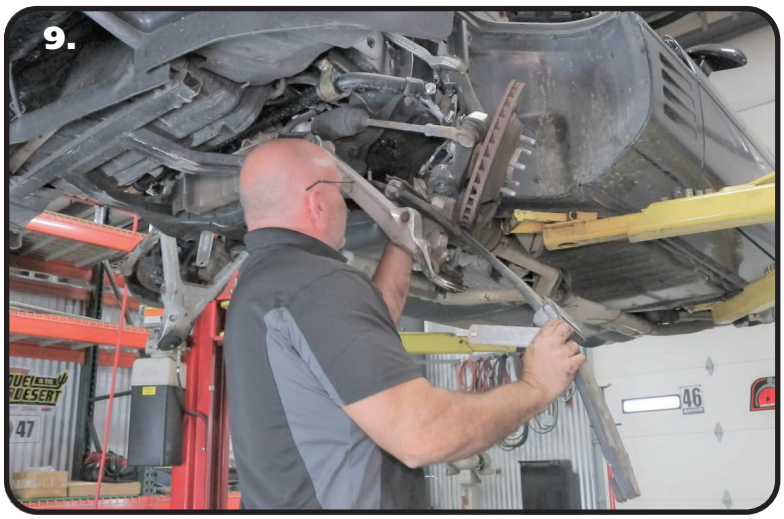

9. Slide the leaf spring out. You will need to remove the frame side of the leaf spring mounting clamps as you pull the spring out.

Disassembly

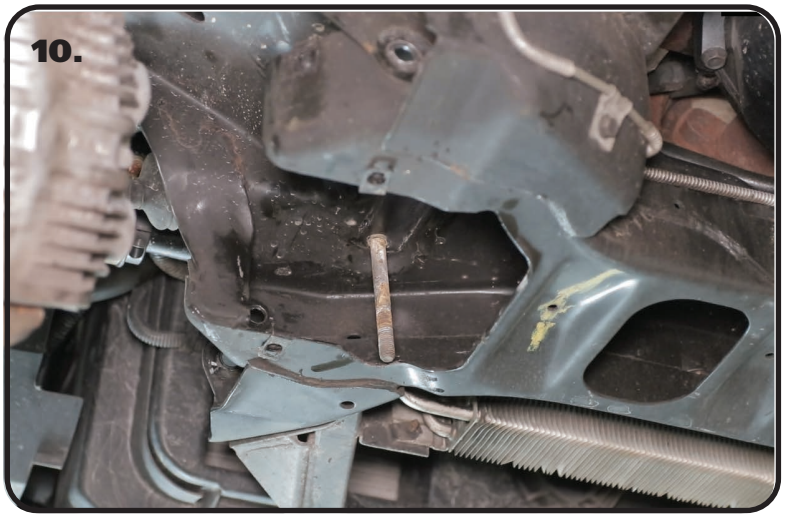

10. Remove the 4 mounting clamp bolts.

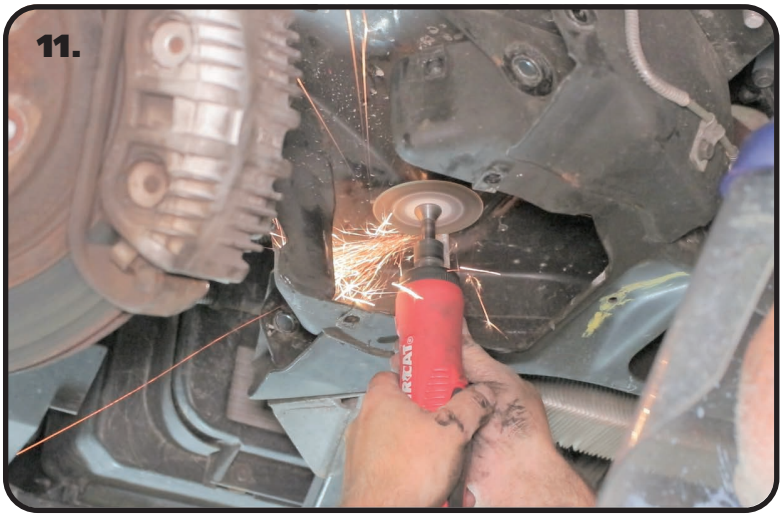

11. We had to cut 1 of the bolts off to remove it. We use a die-grinder with a cutoff wheel to cut the bolt off. Cut it off close to the frame for easier removal.

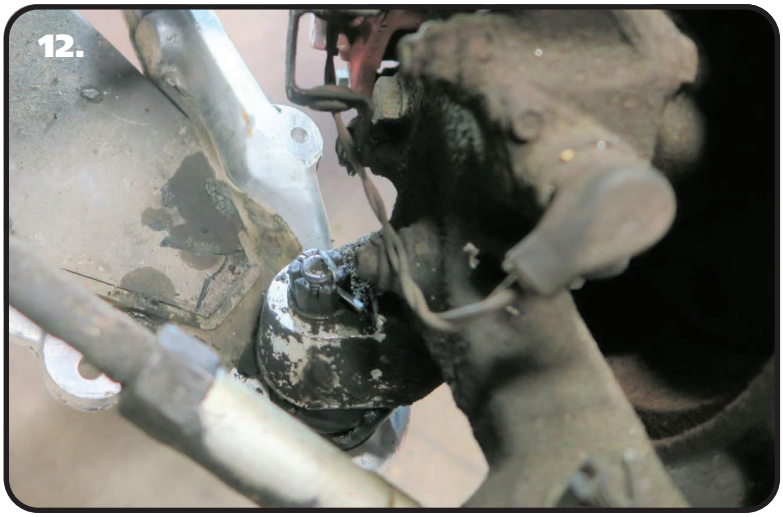

12. Insert the lower ball joint into the spindle. Reinstall the castle nut and torque to 50 ftlbs. Check alignment of the cotter pin hole. If it does not line up with an opening in the castle nut, tighten the nut until they line up. Reinstall the cotter pin and bend the ends to keep it in place.

CoilOver Assembly

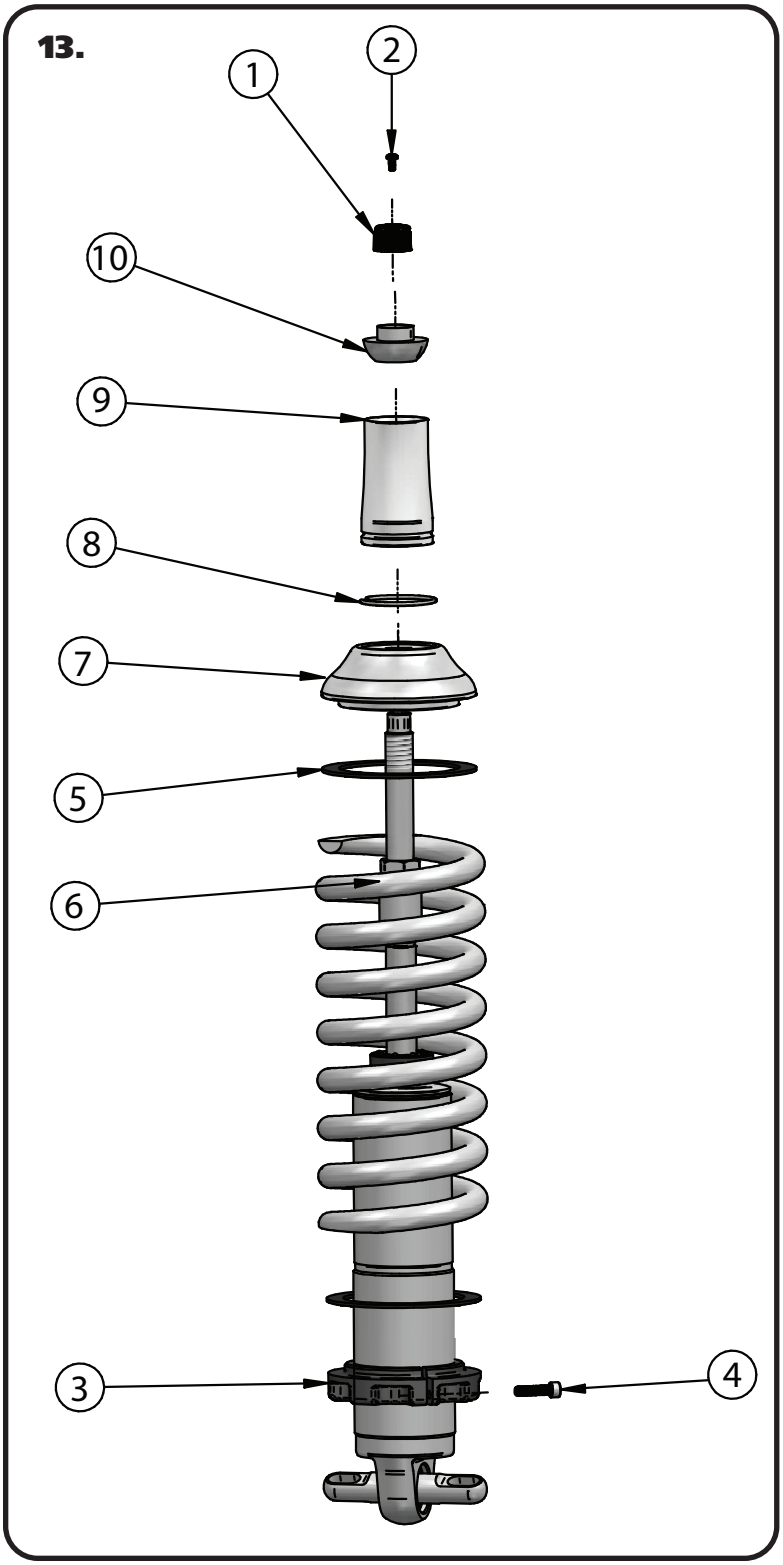

13. To Assemble the CoilOver you need to:

a. Remove Screw (2) from center of Adjustment Knob (1) and remove Adjustment Knob.

b. Remove Nylok Nut, Delrin Upper Cap, Delrin Upper and Lower Balls, along with the base from the CoilOver stud.

c. Thread Adjuster Nut (3) onto the CoilOver body. Once it is threaded on the shock body, lightly thread in the locking screw (4) into the Adjuster Nut.

d. Install a Delrin Spring Washer (5) onto the Adjuster Nut.

e. Slide the CoilSpring (6) onto the CoilOver.

f. Install another Delrin Spring Washer (5) on top of the CoilSpring.

g. Install the Upper CoilSpring Plate (7) onto the CoilSpring.

h. Install the CoilSpring Retaining Ring (8) onto the Stud Top Base (9). It fits into the groove in the base.

i. Slide the Stud Top Base onto the shock until it bottoms out on the stud. It may be necessary to thread the Adjuster Nut down the shock body (to lower the spring) if the base will not slide all the way down onto the stud.

j. Slide the Lower Delrin Ball (10) (it has the collar sticking up around the center hole) on to the Stud Top.

Repeat on second CoilOver.

CoilOver Installation

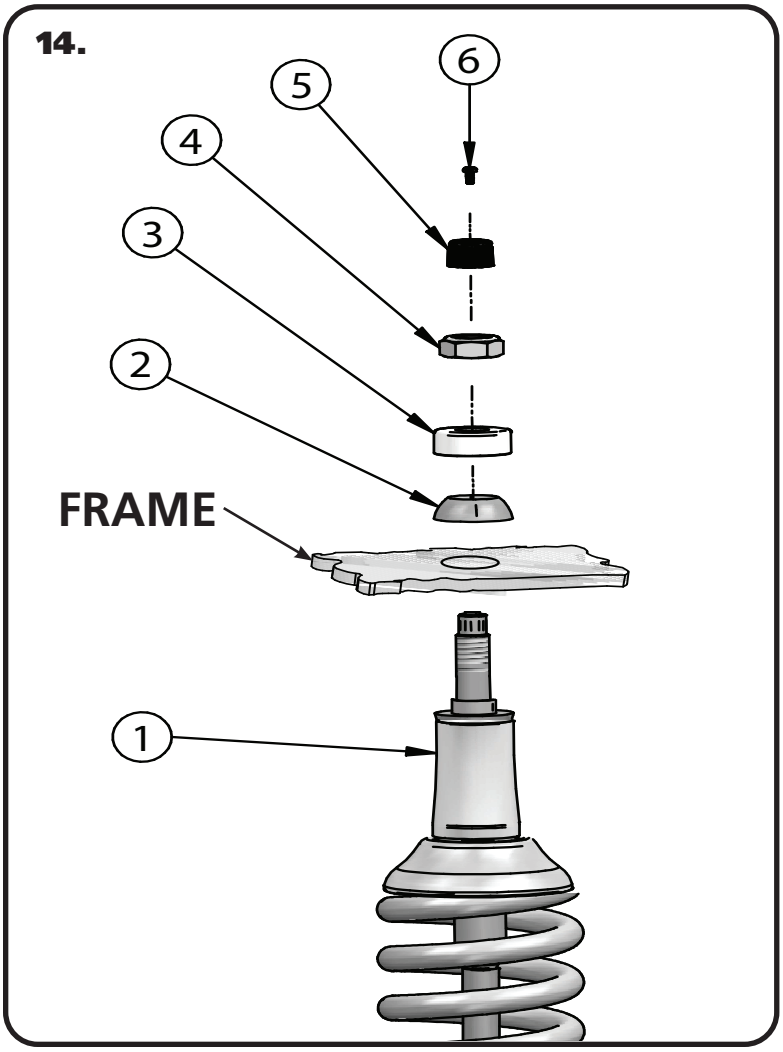

14. With the CoilOver(1) assembled, it is time to bolt them into the car. Insert the CoilOver Stud Top through the factory hole in the frame. Install the Upper Delrin Ball(2) onto the shock stud with the flat side facing the frame. Next, install the Delrin Ball cap (3) onto the shock stud with the Concave side facing the Upper Delrin ball. Install the Nylok Nut(3) onto the shock stud and lightly tighten. There needs to be some resistance on the ball but not tight enough that it will not rotate freely. Reinstall the adjuster knob(5) using the screw (6) that was removed during **Step 13**.

TIGHTENING THE TOP 9/16”-18 NUT: SNUG THE NUT DOWN AGAINST THE TOP CAP. YOU NEED TO BE ABLE TO ARTICULATE THE SHOCK BY HAND. WE TORQUE THE NUT TO 80 INLBS USING A 7/8” CROWS FOOT WRENCH ON A TORQUE WRENCH.

15. Raise the control arm until the trunnion is sitting in the OEM location.

CoilOver Installation

16. You will need to install the Lower Control Arm Linkage Bracket from the Sway Bar Kit, while attaching the CoilOver to the lower control arm. Position the Control Arm Linkage Bracket in place. The linkage bracket is located by the OEM mount in the control arm and the front shock bolt. There is a Driver & Passenger bracket. They will only fit on their corresponding side.

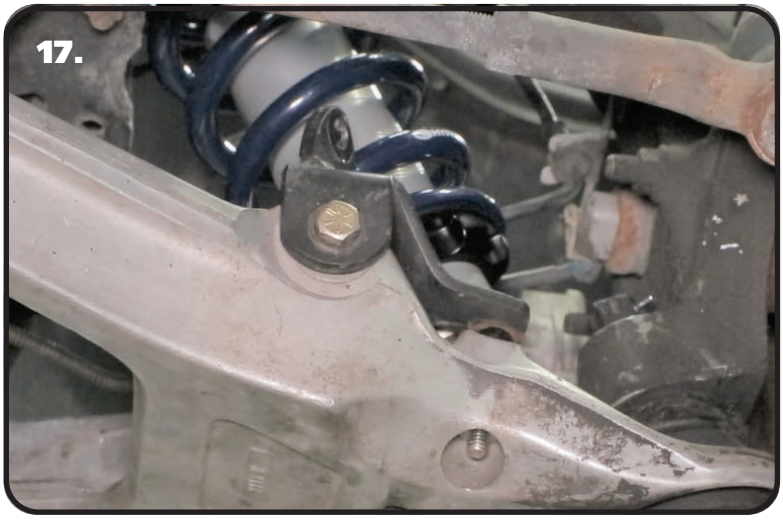

17. Install a 3/8"-16 x 2 3/4" bolts through the bracket and OEM linkage location in the control arm. Install a 3/8" flat washer and 3/8"-16 nylok nut on the threads of the bolt that are sticking through the control arm. Do Not Tighten until the shock bolt has been installed.

18. Install a 5/16"-18 x 2 1/4" bolt through the outer tab and the shock t-bar/control arm. Install a 5/16" flat washer and 5/16"-18 nylok nut on the threads sticking through the control arm.

Hardware Torque:

5/16" hardware:	25 ftlbs
3/8" hardware:	45 ftlbs.

ridetech

Installation Instructions

Part # 11569120 - 1989-1996 C4 Front SwayBar

Recommended Tools

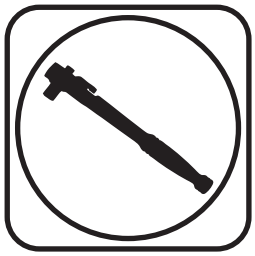

1989-1996 C4 Front SwayBar
Installation Instructions

Table of contents

Hardware Torque Specifications
5/16”-18 .....17 ftlbs
3/8”-16 .....30 ftlbs
M10-1.5..... 37 ftlbs

www.ridetech.com

Major Components .....In the box

Part #	Description	QTY
90003165	Front SwayBar	1
90003167	SwayBar Bushing Frame Spacer	2
90003159	Control Arm Linkage Mount - Driver	1
90003160	Control Arm Linkage Mount - Passenger	1
70012401	Delrin SwayBar Bushing Liner	2
90001099	SwayBar Bushing	2
90002513	SwayBar Bushing Strap	2
90001258	End Link Adapter Spacer	4
70014722	Locking Rings	2

END LINK ASSEMBLY (Preassembled)

Part #	Description	QTY
70014735	10mm Female with Stud	2
70014736	10mm Male with Stud	2
99112001	M10-1.5 Jam Nut	2

HARDWARE KIT.....99010126

QTY	Part Number	Description
SWAYBAR BUSHING FRAME SPACER		
2	99111003	M10-1.5 X 40mm Hex Bolt
SWAYBAR BUSHING STRAP		
2	99111004	M10-1.5 X 60mm Hex Bolt
8	99113002	M10 Flat Washer
2	99371003	3/8"-16 x 1" Hex Bolt
LINKAGE MOUNT TO CONTROL ARM		
2	99373006	3/8"-16 X 2 3/4" Hex Bolt
6	99373002	3/8" SAE Flat Washer
2	99372001	3/8"-16 Nylok Nut

QTY	Part Number	Description
SHOCK BOLTS TO CONTROL ARM		
4	99311031	5/16"-18 x 2 1/4" Hex Bolt
4	99313001	5/16" SAE Flat Washer
4	99312002	5/16"-18 Nylok Nut
END LINKS TO SWAYBAR AND FRAME MOUNT		
4	99112005	M10-1.5 Flange Lock Kit

Getting Started.....

FOR THE BEST PERFORMANCE, WE RECOMMEND USING RIDETECH'S REAR SWAYBAR. THE PART NUMBER FOR THE REAR SWAYBAR IS 11569122.

This SwayBar Kit utilizes a Delrin Liner in the SwayBar Bushing. The Delrin Liner allows the SwayBar to move freely and quietly in the Bushing. The Delrin is self-lubricating, no lubrication is required.

1. Jack the vehicle up to a safe working height and support with jack stands. Make sure the jack stands are stable before working under the car.

2. Remove the stock sway bar.

3. Remove the OEM end links.

4. Open the Delrin Liner at the split and slip it over the SwayBar. Position it in the area that the bushing will ride based on the location of the stock swaybar. Do this on both ends of the swaybar.

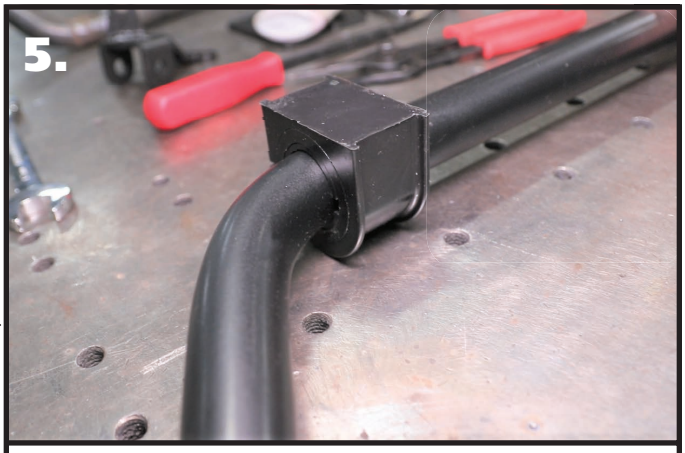

5. Open the SwayBar Bushing at the split and slide it **OVER** the Delrin Liner. Do this on both Delrin Liners.

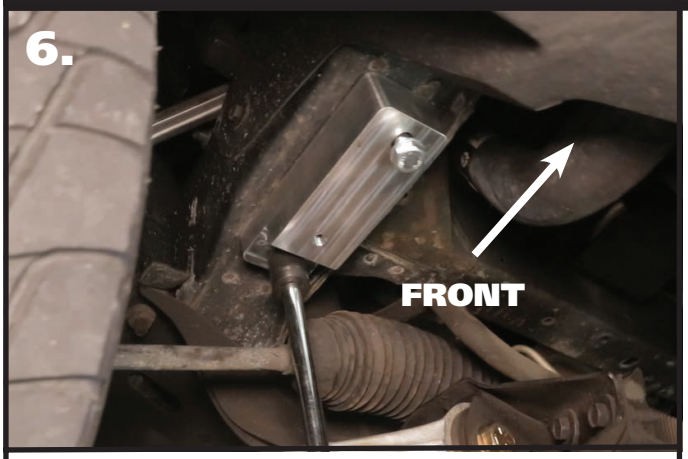

6. Bolt the Aluminum Spacer Block to the frame. The spacer bolt is attached to the frame using a M10-1.5 x 40 bolt and M10 flat washer in the rear hole. A M10-1.5 x 60mm bolt will be used in the front hole for alignment purposes. Torque the rear bolt. Remove the front bolt, it will get reinstalled later.

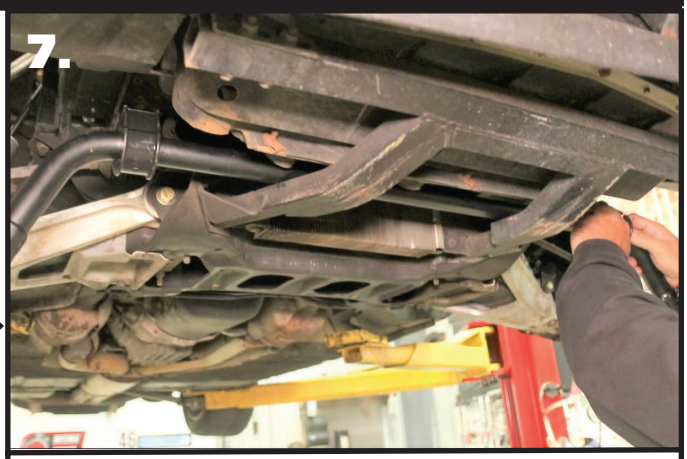

7. Slide the swaybar in place.

8. Install the Bushing Straps on the swaybar bushings.

9. Bolt the bushing straps in place using (1) M10-1.5 x 60mm hex bolt and M10 flat washer in the front hole. The rear holes uses (1) 3/8"-16 x 1" bolt and M10 flat washer. Insert the hardware through the bushing strap bolting the strap in place. DO NOT TIGHTEN THE HARDWARE at this time.

10. Remove the front shock bolt. Slide the Control Arm Linkage Bracket in place. It will mount at the OEM linkage location with a tab the uses the front shock bolt. There is a Driver & Passenger bracket. They will only fit on their corresponding side.

11. Install a 3/8"-16 x 2 3/4" bolts through the bracket and OEM linkage location. Install a 3/8" flat washer and 3/8"-16 nylok nut on the threads of the bolt that are sticking through the bracket. Do Not Tighten until the shock bolt has been installed.

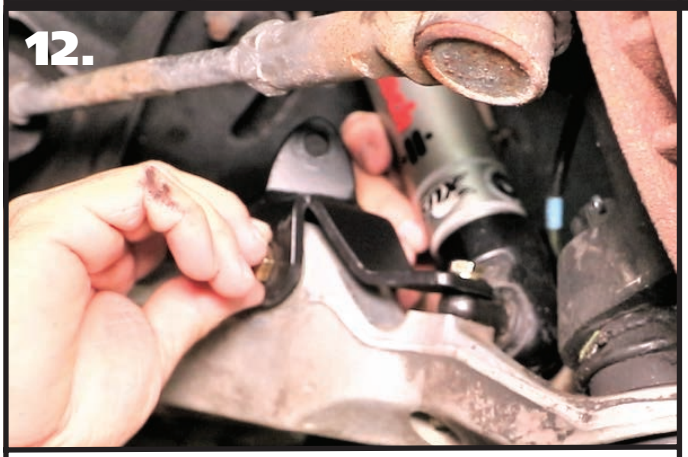

12. Install a 5/16"-18 x 2 1/4" bolt through the outer tab and through the shock t-bar/control arm. Install a 5/16" flat washer and 5/16"-18 nylok nut on the threads sticking through the control arm. Torque all hardware.

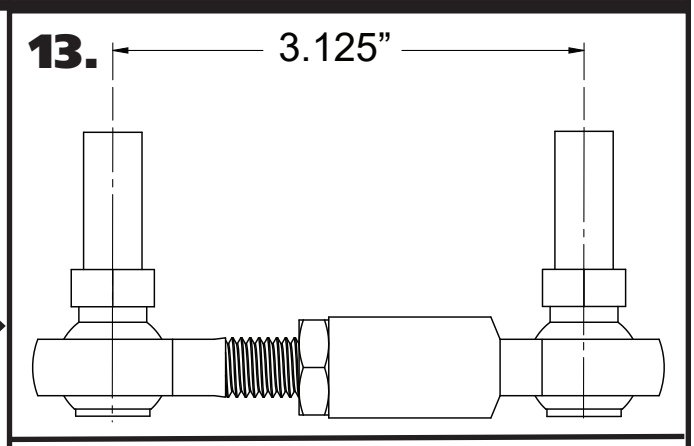

13. Assemble the end links. First, thread a M10-1.5 Jam Nut onto the threads of the male endlink body. Next, thread the male endlink body into the female endlink body. Set them to 3 1/8" center to center of the endlinks. Keep the end links parallel with each other and tighten the jam nut against the female endlink.

14. Install a T-bushing on one end of the linkage (small diameter out), with a 3/8" flat washer on the other end. The end with the T-bushing will be the TOP end of the linkage that will be installed in the swaybar end.

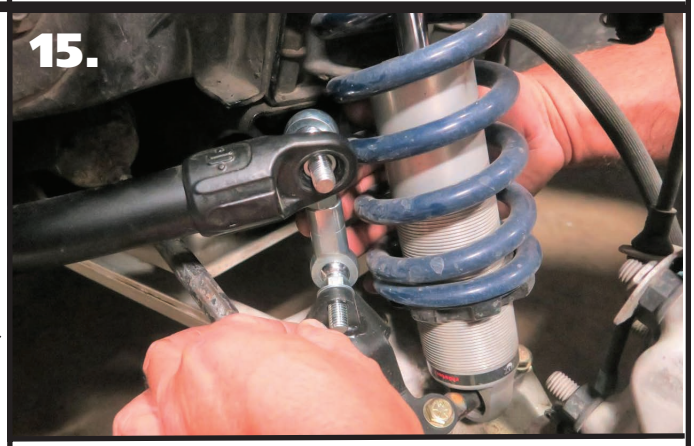

15. Install the Linkage with the Studs pointing to the wheel. The linkage will be installed with the previously installed t-bushing in the swaybar end.

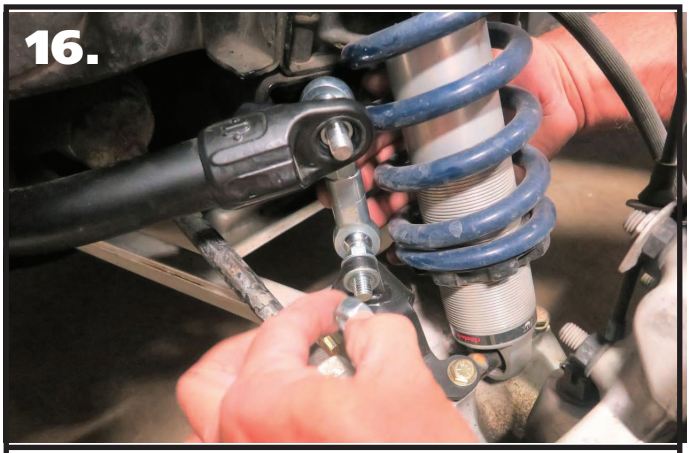

16. Install a 3/8" flat washer followed by a M10-1.5 serrated lock nut on the threads of the lower stud of the linkage.

17. Install a 2nd T-bushing on the threads of the upper stud with the small diameter sticking into the swaybar end.

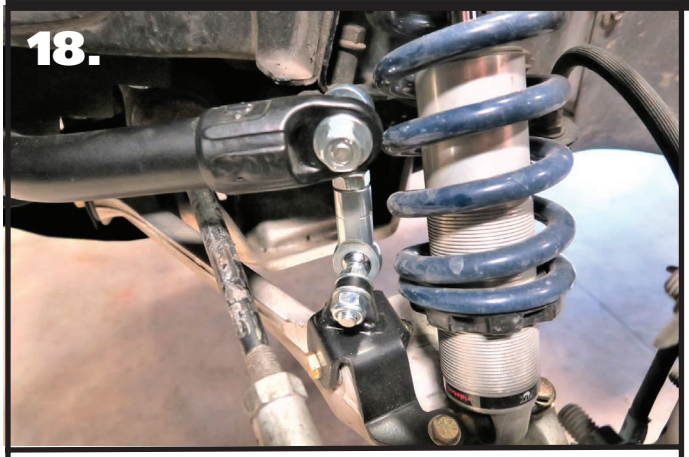

18. Install a M10-1.5 serrated lock nut on the threads of the upper stud of the linkage. Repeat Steps 13-17 on the other side. Torque the hardware.

19. Center the swaybar on the mounts and torque the bushing strap hardware.

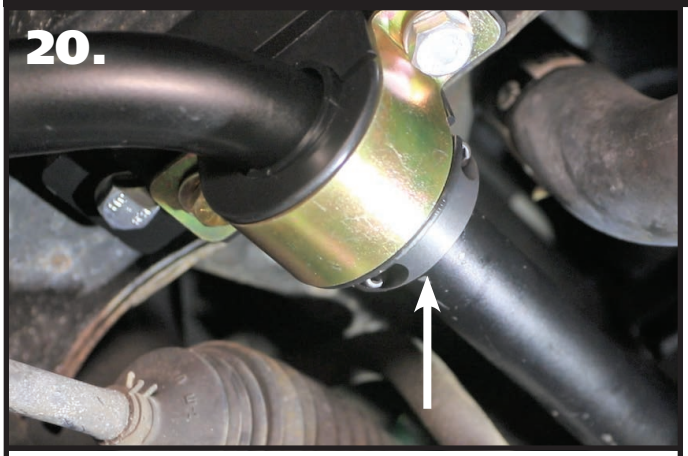

20. Disassemble the Locking Rings provided in the kit. The locking rings will need to be installed against the inside edge of the swaybar bushings. Assemble each locking ring against the swaybar bushing and tighten.

ridetech

Installation Instructions

Part # 11566110 - 1989-1996 C4 HQ Rear CoilOvers

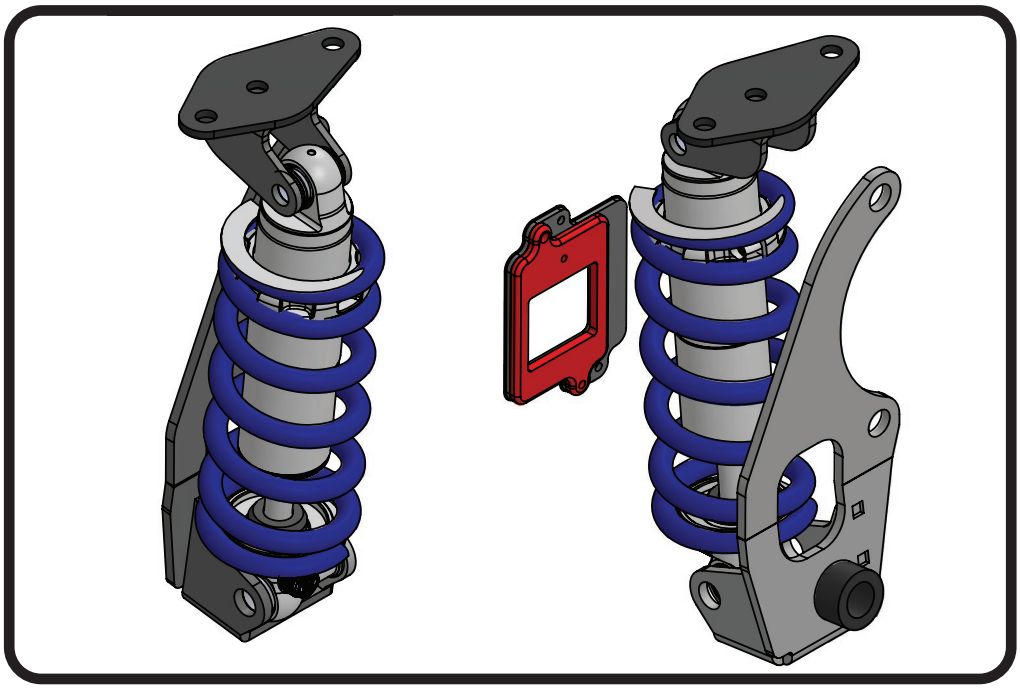

Recommended Tools

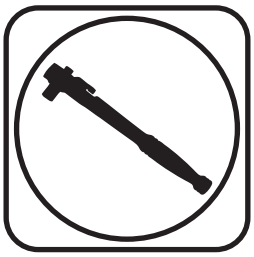

1989-1996 Corvette Rear CoilOvers

Installation Instructions

Table of contents

This kit is Designed to replace the Factory Shocks and Transverse Leaf Spring Setup

www.ridetech.com

812-482-2932

Major Components .....In the box

Item #	Part #	Description	QTY
1	90003155	Lower CoilOver Mount Assembly - Driver	1
2	90003156	Lower CoilOver Mount Assembly - Pass	1
3	90003157	Upper CoilOver Mount Assembly - Driver	1
4	90003158	Upper CoilOver Mount Assembly - Pass	1
5	90003172	ABS Plug Relocation Plate	1
6	70014773	ABS Plug Relocation Gasket	1
7	90003173	.625 x 1.375 Lower Shock Bearing Spacer	2
8	90002042	.625 x .365 Lower Shock Bearing Spacer	2
9	90002043	.500 x .365 Upper Shock Bearing Spacer	4
10	982-10-804	3.6" Stroke HQ Series Shock	2
11	815-05-022	Shock Eyelet Assembly	2
12	59080500	Coilspring 8" 500lb	2
13	70010828	Delrin Spring Washer	4
14	803-00-199(kit)	Lower Spring Adjuster Nut (803-00-199 kit)	2
15	803-00-199(kit)	Adjuster Nut Locking Screw (803-00-199 kit)	2
16	803-00-199(kit)	Upper CoilSpring Retaining Plate (803-00-199 kit)	2
17	803-00-199(kit)	CoilSpring Plate Retaining Ring (803-00-199 kit)	2
18	90001994	5/8" ID Bearing (installed in shock eyelet/body)	4
19	90001995	Bearing Snap Ring (installed in shock eyelet/body)	8

HARDWARE LIST Kit # 99010125

QTY	Part Number	Description
LOWER COILOVER MOUNTING		
2	99621004	5/8"-18 x 3" Hex Bolt
2	99621010	5/8"-18 x 4" Hex Bolt
8	99623001	5/8" SAE Flat Washer
4	99622001	5/8"-18 Nylok Nut
UPPER COILOVER		
2	99501064	1/2"-13 x 2 3/4" Hex Bolt
4	99503014	1/2" SAE Flat Washer
2	99502009	1/2"-13 Nylok Nut
ABS PLUG RELOCATION PLATE		
4	99101009	#10 x 3/4" Tek Screw

Major Components .....In the box

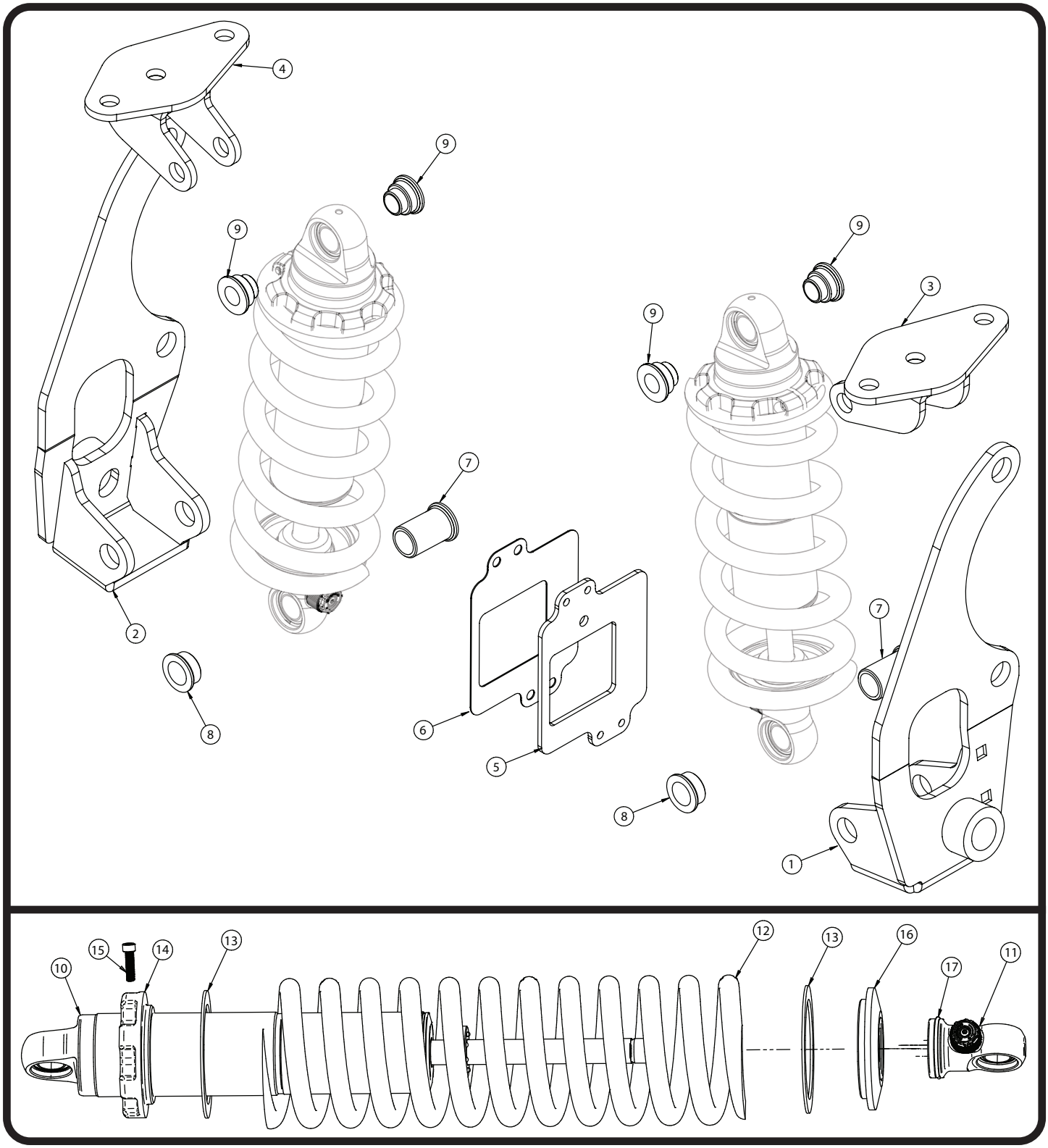

Getting Started and Disassembly

Congratulations on your purchase of the Ridetech C4 Rear CoilOver System. This system has been designed to give your Corvette excellent handling along with a lifetime of enjoyment. The CoilOver System provides flexibility that can not be achieved with Leaf Springs. The CoilOver System will give you the flexibility of adjusting your ride height along with numerous spring options to dial in your ride quality to your personal preference.

This CoilOver System is Designed to replace the factory Shock and Leaf Spring.

1. The rear OEM Shocks and Leaf Spring will need to be removed from the rear of the car.

2. Raise the vehicle and support it by the frame allowing the suspension to hang freely.

3. Remove the shocks and OEM upper mounts from both sides of the car.

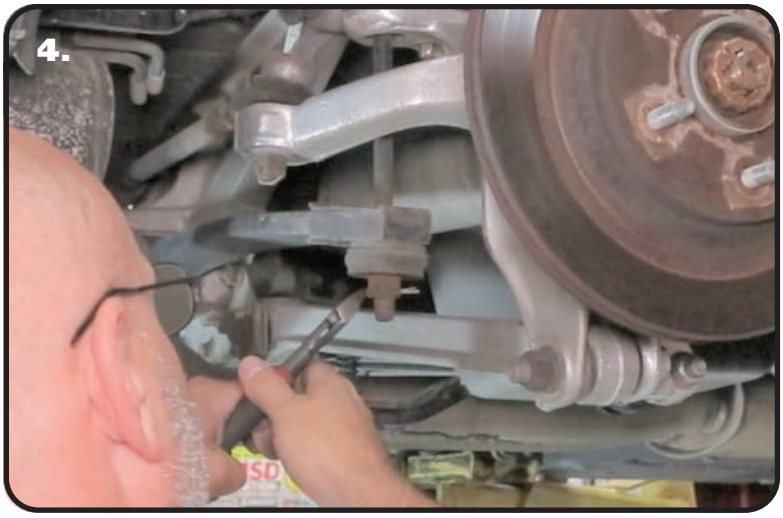

4. Remove the cotter pins from the leaf spring bolts.

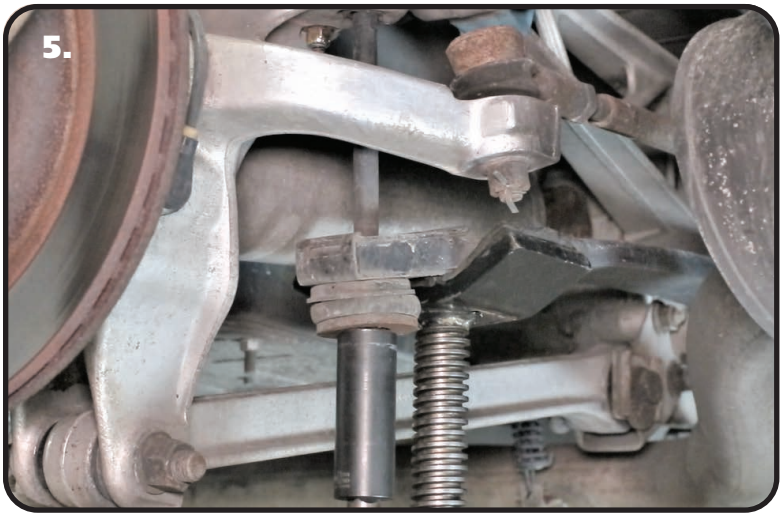

5. Use a jack to push up on the end of the leaf spring. Raise the jack just enough to relieve the pressure on the leaf spring bolt.

Disassembly

6. Remove the leaf spring bolt. Repeat steps 4-6 on the opposite side.

7. Remove the (4) leaf spring mounting bolts from the leaf spring center mount.

8. With the hardware removed, slide the leaf spring out of the car.

Disassembly

9. Remove the lower shock stud from the knuckle.

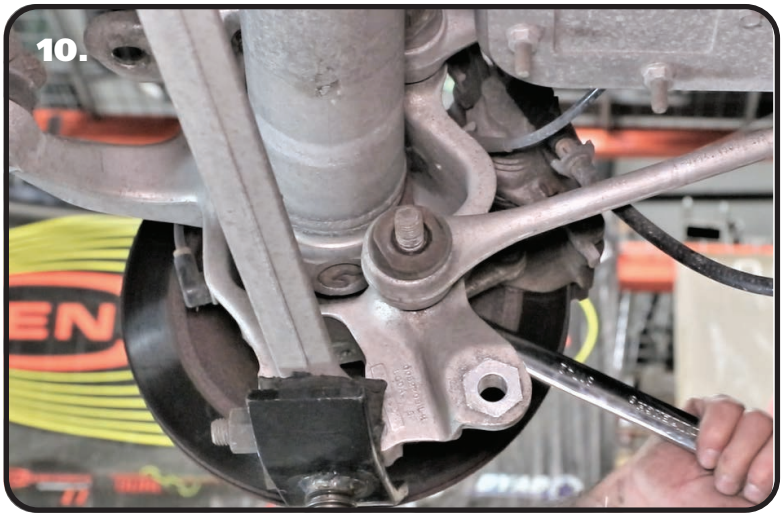

10. Remove the inner nut from the lower trailing arm. Retain the nut for assembly.

11. Remove the inner nut from the upper trailing arm. Retain the nut for assembly.

CoilOver Assembly...

First using the supplied lower adjuster nut(90002222) thread the nut onto the shock from the bottom side as seen in figure 1.

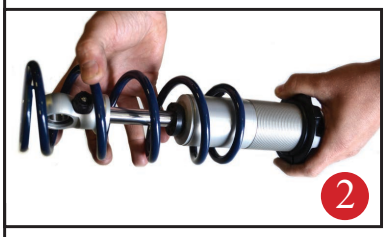

Next install delrin washers then coil spring over the top of the shock as seen in figure 2.

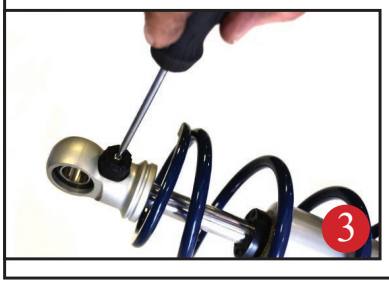

Before the upper spring mount can be installed screw the adjuster knob on the upper eye mount to the firmest setting (clockwise) as seen in figure 3. Then remove the Knob.

Once the knob is removed slide the Delrin washer over the spring, Next slide the upper spring mount (90002222) over eyelet as seen in figure 4.

Install upper spring mount retainer clip (90002057) into the groove on the upper eyelet as seen in figure 5. Then reinstall adjuster to complete assembly.
NOTE: Remember to adjust the shock valving before driving, the shock is currently set to full stiff.

ABS Wiring Pass Thru Relocation

The rear CoilOver setup requires the ABS wire pass thru, on the drivers side, to be moved forward. Steps 12-18 cover the moving of the pass thru. Image 12 is of the wire pass thru in the OEM location. You will need to access the ABS compartment that is located under the carpet, directly behind the drivers seat.

12. Locate the ABS wire pass thru. It is located on the drivers side, behind the trailing arms.

ABS Wiring Pass Thru Relocation

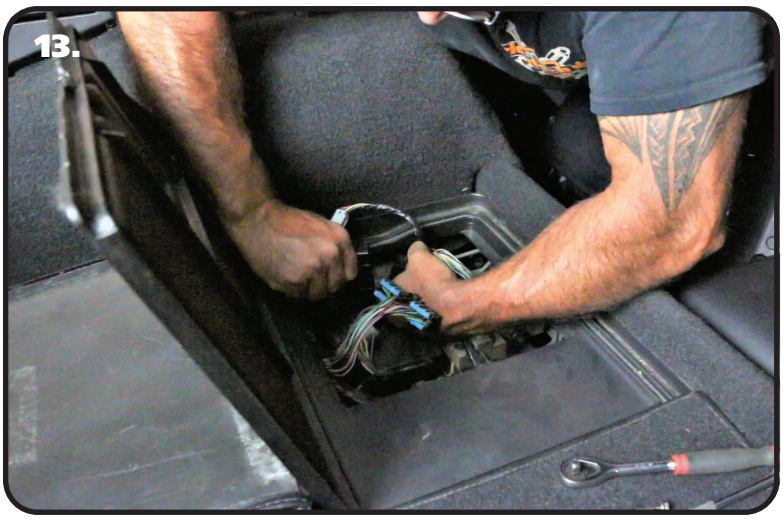

13. Open the ABS compartment located behind the drivers seat. The carpet has a flap built into it. Lift the carpet flap to expose the ABS compartment door. Remove the bolt that holds the door closed. The Wire Pass Thru is on the wheel side of the compartment. Unplug the 2 plugs that are attached to the wires that go through the pass thru.

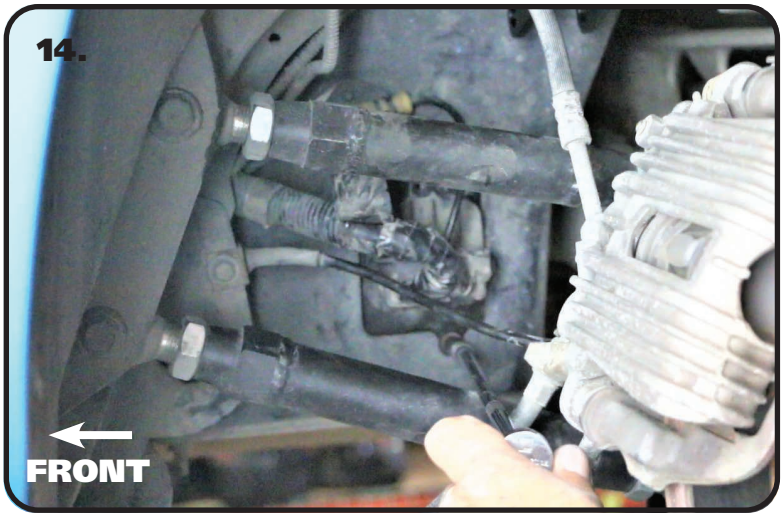

14. Remove the 2 screws that attach the pass thru to the body of the car. Pull the pass thru away from the body. Pull the wires and 2 plugs out of the hole of the body.

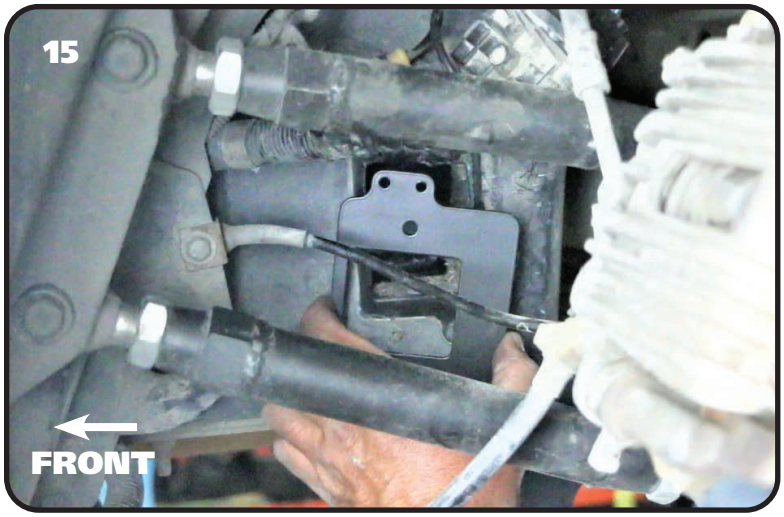

15. Use **Diagrams 15 & 16** to aid in mounting the relocation plate. Use the Gasket that is supplied in the kit to seal the plate to the body. Bolt the plate/gasket to the body using the OEM hardware. The OEM hardware will go through the 2 rear holes that are at the top and bottom of the plate and gasket.

ABS Wiring Pass Thru Relocation

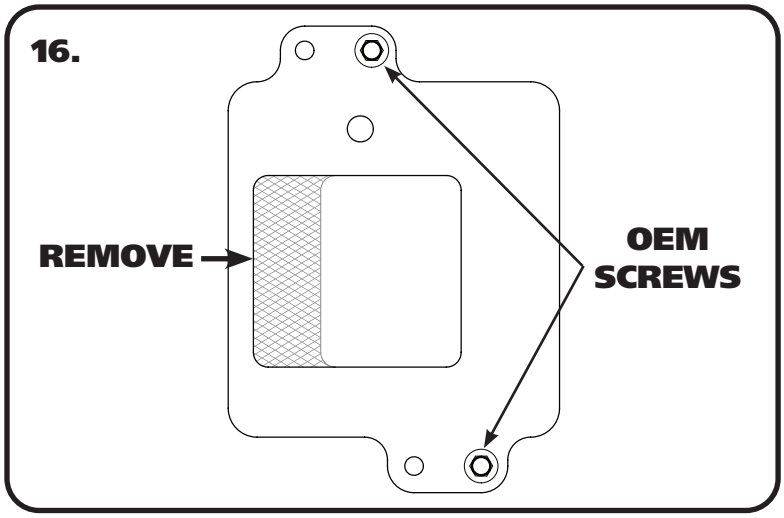

16. Remove the body material that is exposed in the opening of the relocation plate. It is the grayed out area in **Diagram 16**. We used an air saw to remove ours. Be sure to check for clearance behind the panel before cutting.

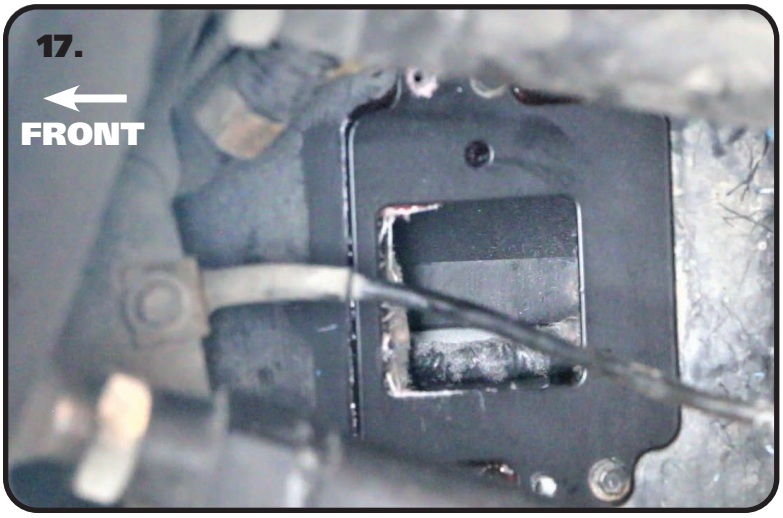

17. The wire pass thru will be reattached to the car using the forward holes of the relocation plate. Use the supplied #10 Tek screws to drill new mounting holes. This is easier to do before putting the pass thru back in place.

18. Reinstall the wire pass thru by feeding the 2 plugs' and associated wire' through the hole of the plate and body. Attach the pass thru to the car using the #10 Tek screws that were used to drill the new mounting holes. Plug the wire connectors back together with their corresponding connectors. Close the ABS compartment and reinstall the bolt the holds it closed. Fold the carpet back down over the compartment lid.

CoilOver Installation

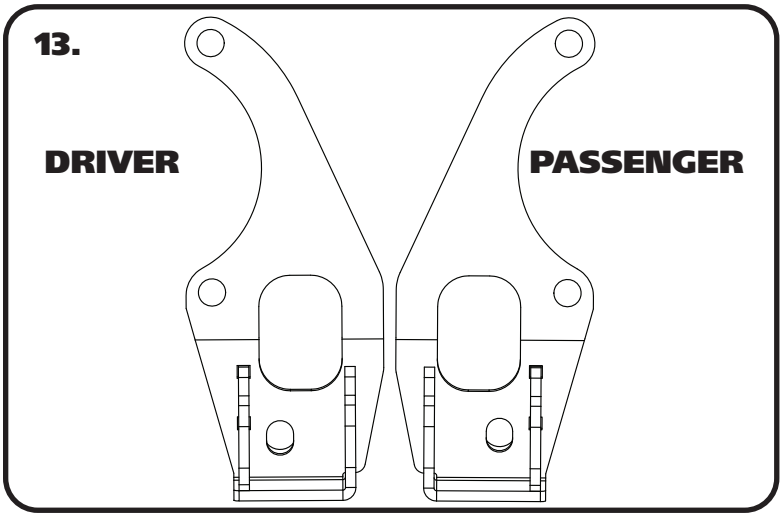

13. The Lower Shock Mounts are side specific. **Diagram 13** is to help you identify the correct bracket for each side. The bracket is positioned with the shock mounting tabs pointing to the center of the car. The mount also moves the shock to the front of the car for better clearance of the half shafts. The mount is also designed to clear the half shafts.

14. Slip the Lower Mount onto the trailing arm bolts and reinstall the OEM hardware. Do not tighten hardware until the lower mounting bolt is installed.

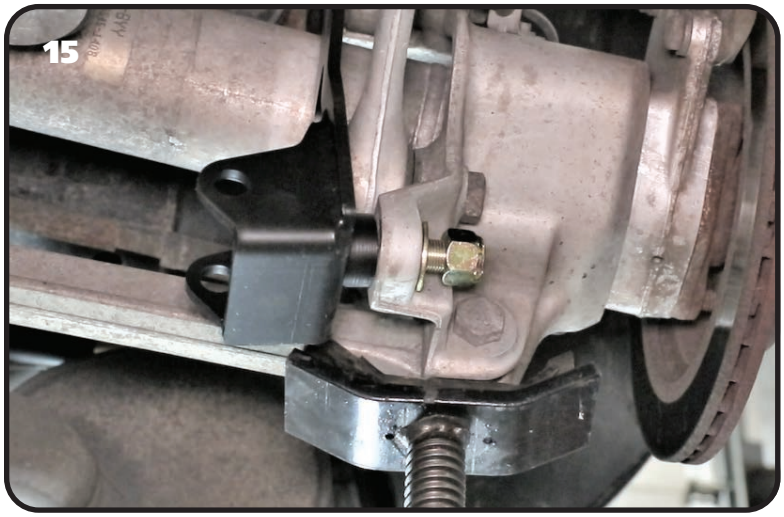

15. Install 5/8″ flat washer on a 5/8″-18 x 3″ bolt. Install the bolt/washer through the lower mount and through and knuckle. THIS BOLT HAS TO BE INSTALLED WITH THE THREADS POINTING OUT TOWARD THE WHEEL. Install a 5/8″ flat washer and 5/8″-18 nylok nut on the threads sticking through the knuckle. Torque the hardware to 140 ftlbs.

CoilOver Installation

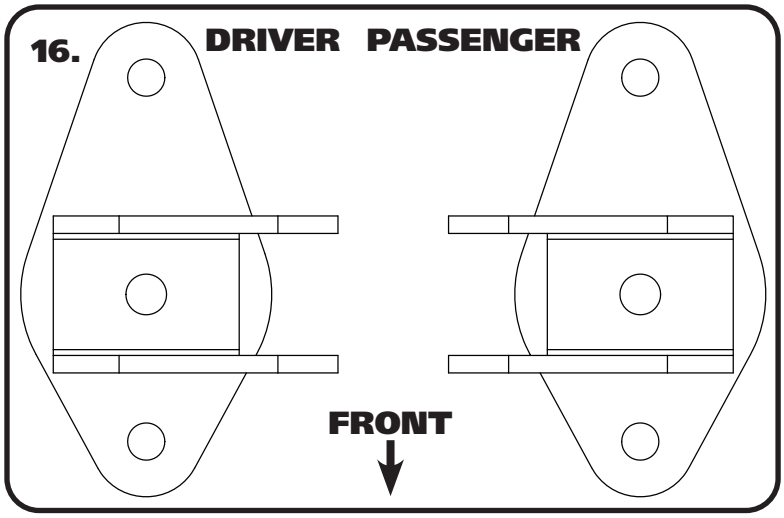

16. The Upper Shock Mounts are side specific. **Diagram 16** is to help you identify the correct bracket for each side. The bracket is positioned with the shock mounting tabs pointing to the center of the car. The mount also moves the shock to the front of the car for better clearance of the half shafts.

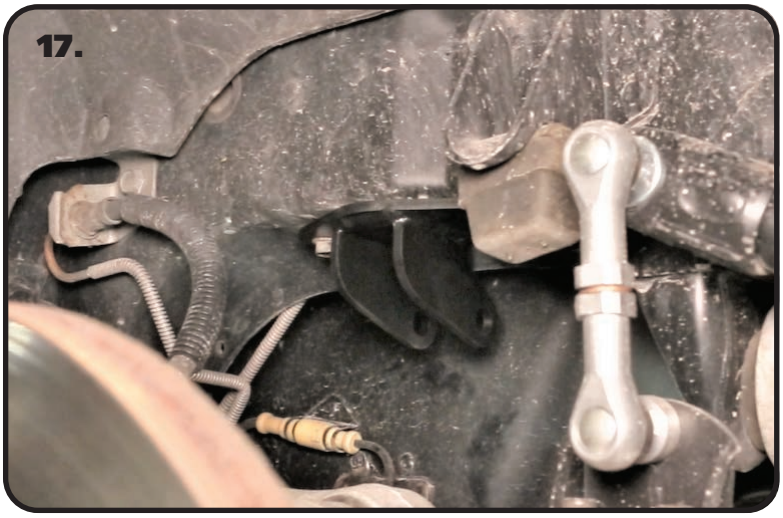

17. Use the OEM hardware to attach the upper mount to the car. Make sure you are installing the correct upper mount on the correct side. Use **Diagram 16** to aid you in identifying the mounts. Torque the hardware to 37 ftlbs.

18. Install the 1/2" I.D. bearing spacers into bearing in the shock body. These spacers have a through hole that is 1/2" diameter. The small diameter of the spacers will insert into the shock bearing. The shocks will need to be installed with the shock adjustment knob at the bottom for ease of adjustment. Insert the shock into the upper mount. Line up the thru holes of the upper mount with the thru hole of the bearing spacers.

CoilOver Installation

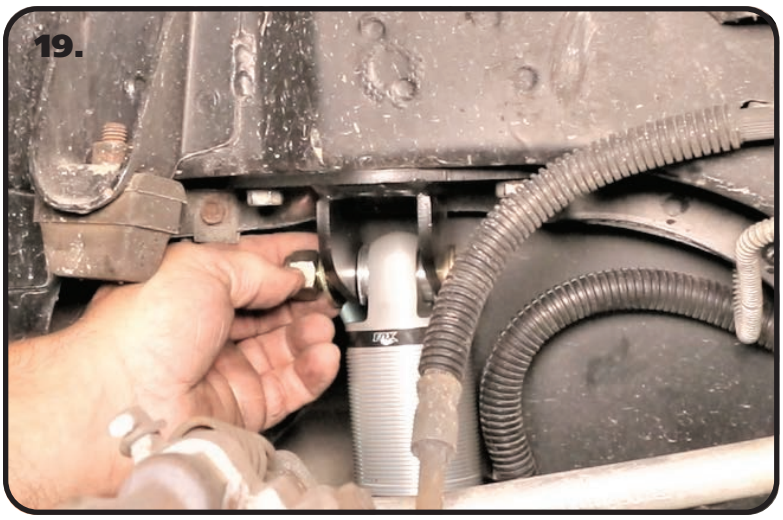

19. Install a 1/2" flat washer on a 1/2"-13 x 2 3/4" bolt. Insert the bolt/washer through the mount and shock. Install a 1/2" flat washer and 1/2"-13 nylok nut on the threads of the bolt that is sticking through the mount/shock. Repeat on the other side.

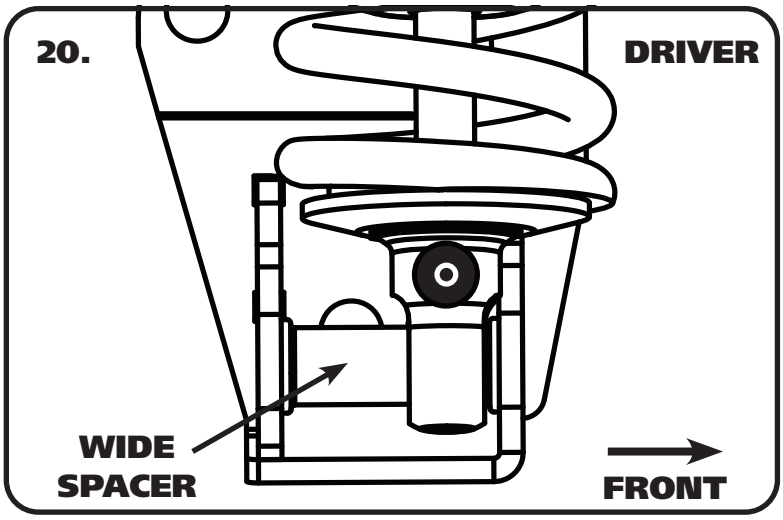

20. The shock eyelet is attached to the lower mount using (2) 5/8" ID spacers. It uses a 1.375" long spacer in the rear with a .365" long spacer in the front. The 1.375" spacer helps move the shock forward. These spacers are installed with the smaller OD against the shock bearing. Hold the spacers against the bearing and slip it into the lower mount. **Mount the shock with the adjuster pointing to the center of the car**.

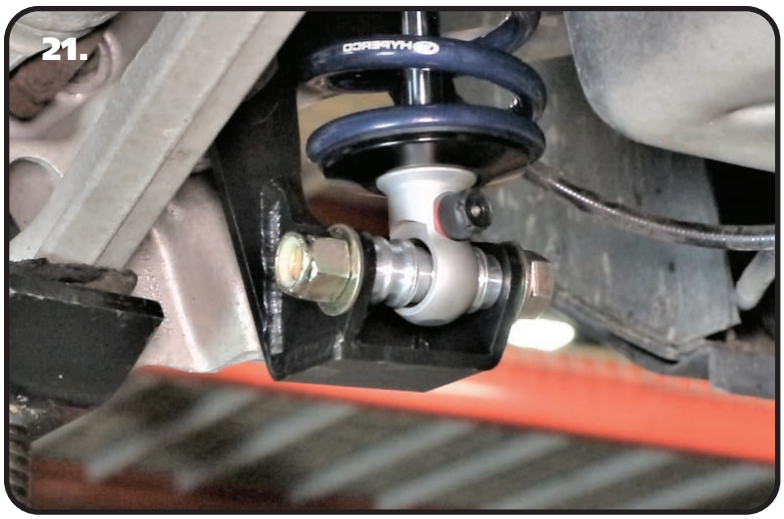

21. Line up the thru hole of the lower mount with the thru hole of the spacers/shock bearing. You may need to use a jack to help hold the knuckle in position. Install a 5/8" flat washer on a 5/8"-18 x 4" bolt. Insert the bolt/washer through the mount and shock. Install a 5/8" flat washer and 5/8"-18 nylok nut on the threads of the bolt that is sticking through the mount/shock. Repeat on the other side. Torque the shock mounting hardware to 75 ftlbs.

ridetech

Installation Instructions

Part # 11569122 - 1989-1996 C4 Rear SwayBar

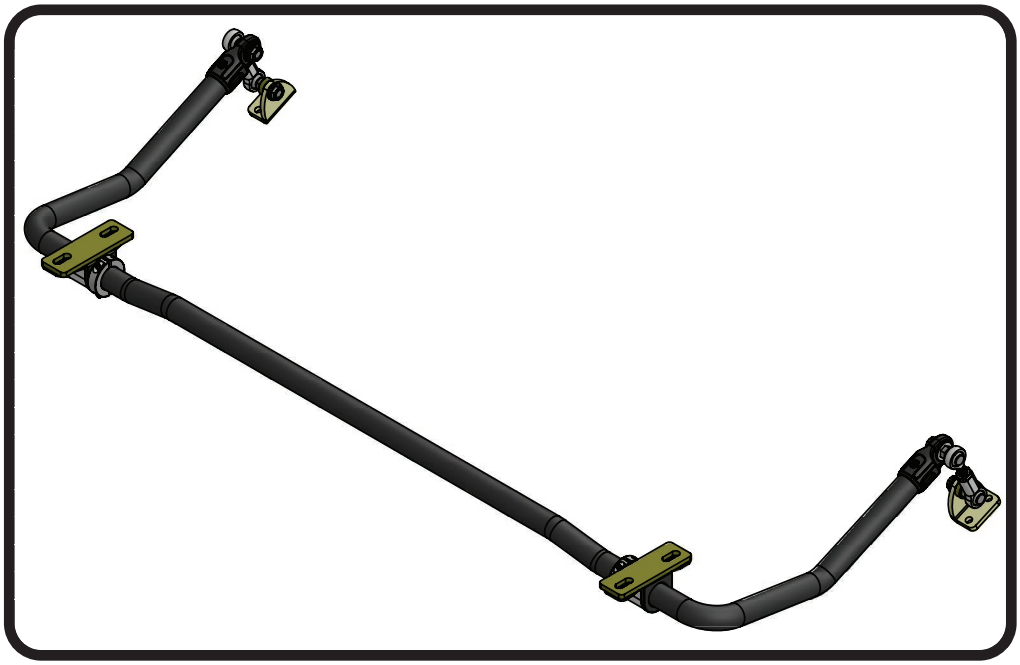

Recommended Tools

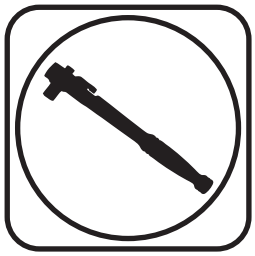

1989-1996 C4 Rear SwayBar
Installation Instructions

Table of contents

Major Components .....In the box

Part #	Description	QTY
90003161	Rear SwayBar	1
90003164	SwayBar Bushing Frame Spacer	2
90003162	Control Arm Linkage Mount	2
70012402	Delrin SwayBar Bushing Liner	2
90002539	SwayBar Bushing	2
90002533	SwayBar Bushing Strap	2
90001258	End Link Adapter T-Bushing	4
90003163	End Link Spacer (.300" Thick)	2
70014721	Locking Rings	2

END LINK ASSEMBLY (Preassembled)

Part #	Description	QTY
70014735	10mm Female with Stud	2
70014736	10mm Male with Stud	2
99112001	M10-1.5 Jam Nut	2

HARDWARE KIT.....99010127

QTY	Part Number	Description
END LINK MOUNTS TO KNUCKLE		
4	99311011	5/16"-18 x 1 1/4" Hex Bolt
4	99313001	5/16" SAE Flat Washer
4	99312002	5/16"-18 Nylok Nut
END LINKS TO KNUCKLE MOUNT		
4	99113002	M10 Flat Washer
END LINKS TO SWAYBAR AND FRAME MOUNT		
4	99112005	M10-1.5 Flange Lock Kit

Getting Started.....

FOR THE BEST PERFORMANCE, WE RECOMMEND USING RIDETECH'S FRONT SWAYBAR. THE PART NUMBER FOR THE FRONT SWAYBAR IS 11569120.

This SwayBar Kit utilizes a Delrin Liner in the SwayBar Bushing. The Delrin Liner allows the SwayBar to move freely and quietly in the Bushing. The Delrin is self-lubricating, no lubrication is required.

1. Jack the vehicle up to a safe working height and support with jack stands. Make sure the jack stands are stable before working under the car.

2. Remove the spare tire and spare tire carrier from the car for easier access to the swaybar. It will be reinstalled later.

3. Remove the stock sway bar and endlinks. To remove the bar, the rear of the exhaust will need to be disconnected from the car. You need to be able to pull the exhaust down to remove the OEM bar and install the new Ridetech swyabr.

4. Remove the OEM end links mounts from the knuckle.

5. Open the Delrin Liner at the split and slip it over the SwayBar. Position it in the area that the bushing will ride based on the location of the stock swaybar. Do this on both ends of the swaybar.

6. Open the SwayBar Bushing at the split and slide it **OVER** the Delrin Liner. Do this on both Delrin Liners.

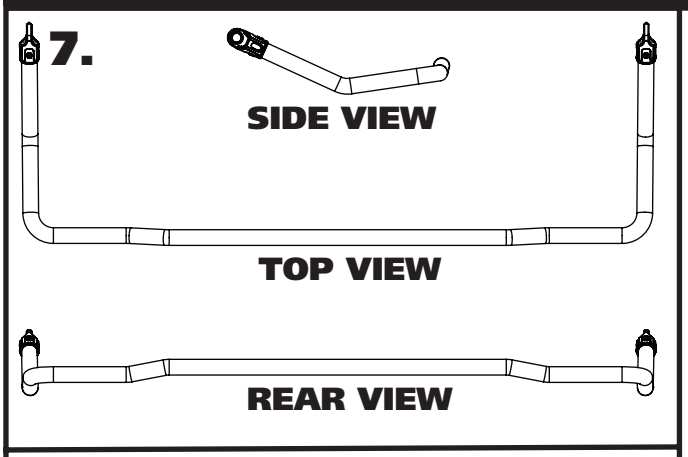

7. Slide the swaybar in place.

8. Slide the swaybar in place. The resr of the exhaust may need to be pulled down to get the swaybar installed.

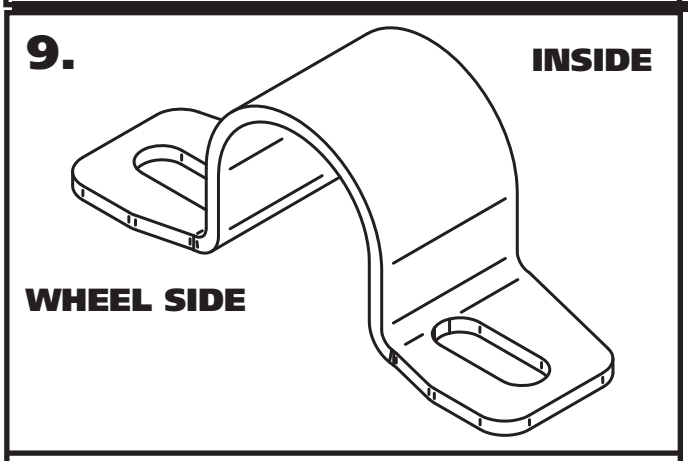

9. The bushing straps included in this kit are offset. The straps need to be installed on the car with the bolt holes offest to the wheel side of the bushing strap.

10. Install the Bushing Straps on the swaybar bushings. They need to be installed with the bolt holes offest towards the wheel.

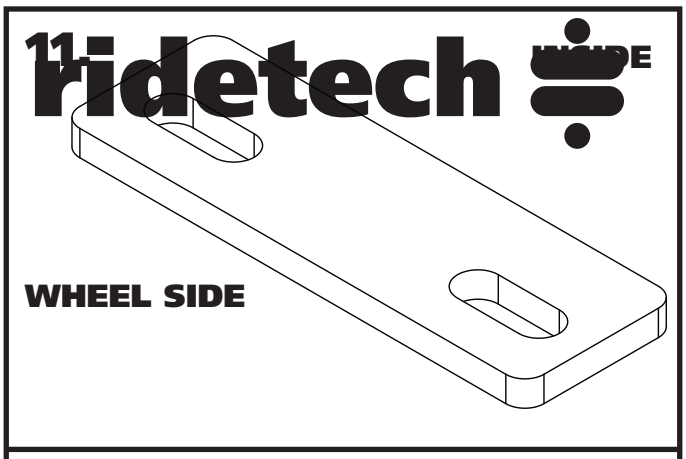

11. Just like the bushing straps, the bushing spacers included in this kit are offset. The bushing spacers need to be installed on the car with the bolt holes offest to the wheel side of the bushing strap.

12. Install the bushing spacers under the swaybar bushings. They need to be installed with the bolt holes offest towards the wheel. The spacers will slide over the OEM mounting studs.

13. The swaybar bushings/straps will slip in place on the OEM studs. Push the swaybar up inplace. Reuse the OEM hardware to attach the swaybar bushings/swaybar to the car. Torque nuts to 18 ftlbs.

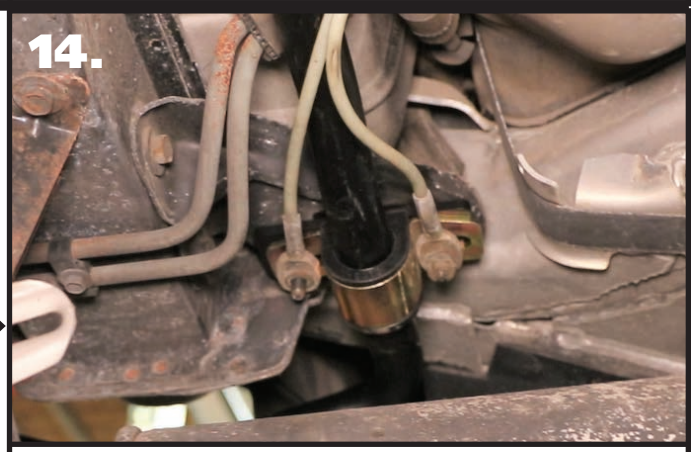

14. Use the OEM hardware to reattach the gas tank safety cables to the swaybar mounting studs.

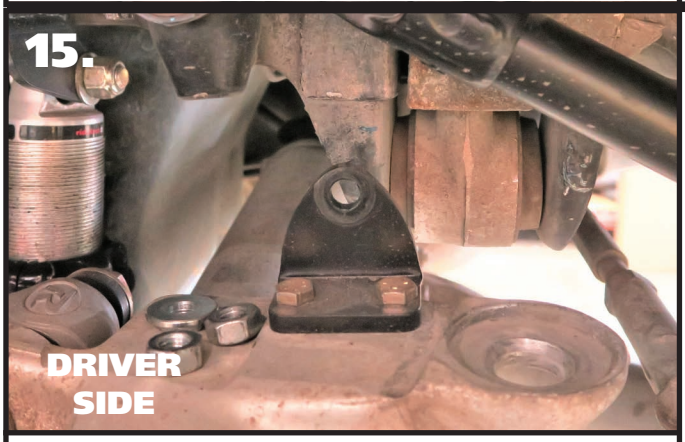

15. Install the new linkage mounts in place of the OEM mounts. They are installed with the mounting holes to the wheel. Line up the mounting holes with the OEM holes. Install a 5/16"-18 x 1 1/4" bolt, flat washer, and 5/16"-18 nylok nut. Torque hardware to 25 ftlbs.

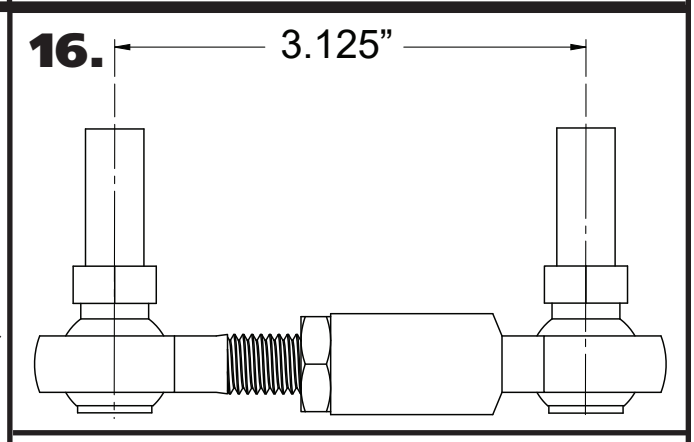

15. Assemble the end links. First, thread a M10-1.5 Jam Nut onto the threads of the male endlink body. Next, thread the male endlink body into the female endlink body. Set them to 3 1/8" center to center of the endlinks. Keep the end links parallel with each other and tighten the jam nut against the female endlink.

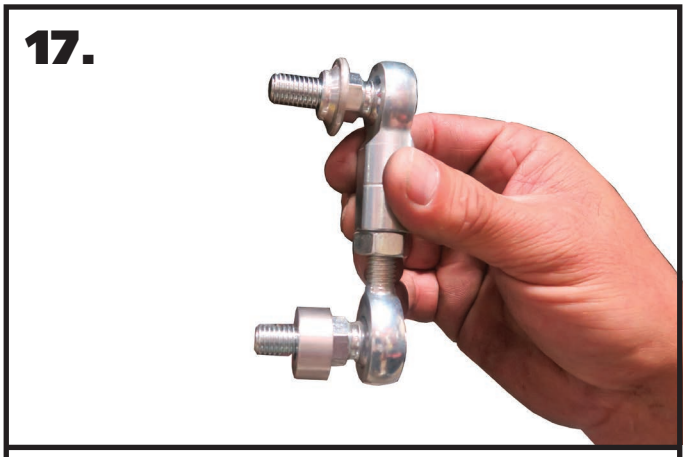

17. Install a T-bushing on one end of the linkage (small diameter out), with a .300" thick spacer on the other end. The end with the T-bushing will be the TOP end of the linkage that will be installed in the swaybar end.

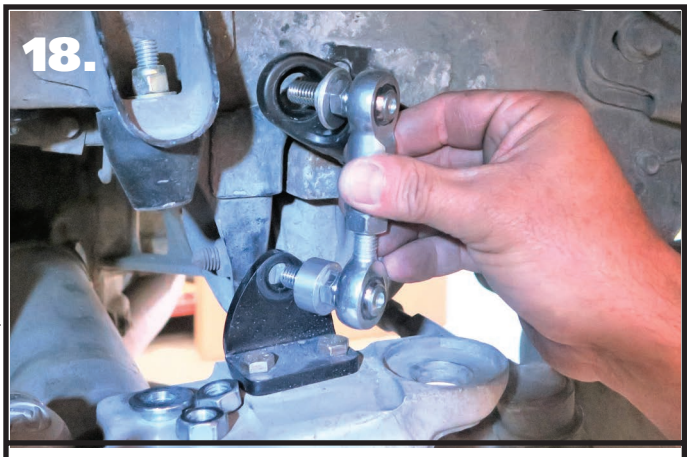

18. Install the Linkage with the Studs pointing to the center of the car. The linkage will be installed with the previously installed t-bushing in the swaybar end.

19. Install a 2nd T-bushing on the threads of the upper stud with the small diameter sticking into the swaybar end.

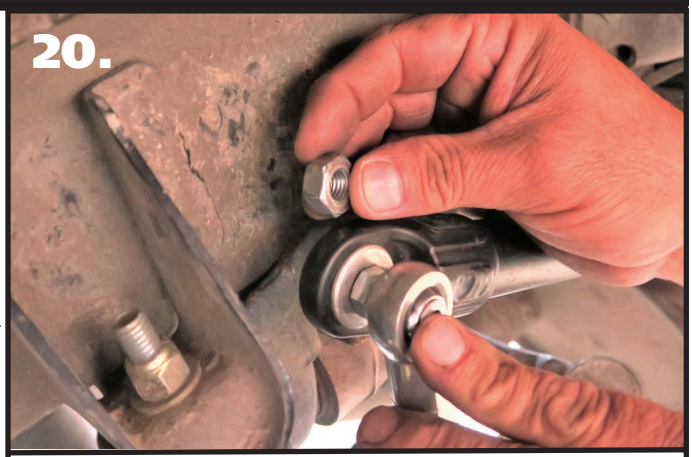

20. Install a M10-1.5 serrated lock nut on the threads of the upper stud of the linkage.

21. Install a M10 flat washer and M10-1.5 serrated lock nut on the threads of the lower stud of the linkage. Repeat Steps 15-20 on the other side. Torque the hardware to 37 ftlbs.

22. Disassemble the Locking Rings provided in the kit. The locking rings will need to be installed against the inside edge of the swaybar bushings. Assemble each locking ring against the swaybar bushing and tighten.

23. Reattach the exhaust.

24. Reinstall the spare tire and holder.

CoilSpring Adjusting

Ride Height

We have designed most cars to have a ride height of about 1 1/2" lower than factory. To achieve the best ride quality & handling, the shock absorber needs to be at 40-60% overall travel when the car is at ride height. This will ensure that the shock will not bottom out or top out over even the largest bumps. Measuring the shock can be difficult, especially on some front suspensions. Measuring overall wheel travel is just as effective and can be much easier. Most cars will have 4-6" of overall wheel travel. One easy way to determine where you are at in wheel travel is to take a measurement from the fender lip (center of the wheel) to the ground. Then lift the car by the frame until the wheel is just touching the ground, re-measure. This will indicate how far you are from full extension of the shock. A minimum of 1.5" of extension travel (at the wheel) is needed to ensure that the shock does not top out. If you are more than 3" from full extension of the shock then you are in danger of bottoming out the shock absorber.

Adjusting Spring Height

When assembling the CoilOver, screw the spring retainer tight up to the spring (0 preload). After entire weight of car is on the wheels, jounce the suspension and roll the car forward and backward to alleviate suspension bind.

- If the car is too high w/ 0 preload then a smaller rate spring is required. Although threading the spring retainer down would lower the car, this could allow the spring to fall out of its seat when lifting the car by the frame.

- If the car is too low w/ 0 preload, then preload can then be added by threading the spring retainer up to achieve ride height. On 2.6" - 4" stroke shocks, up to 1.5" of preload is acceptable. On 5-7" stroke shocks, up to 2.5" of preload is acceptable. If more preload is needed to achieve ride height a stiffer spring rate is required. Too much preload may lead to coil bind, causing ride quality to suffer.

Shock Adjustment

Shock adjustment 101- **Single Adjustable**

Rebound Adjustment:
How to adjust your new shocks.
The rebound adjustment knob is located on the top of the shock absorber protruding from the eyelet.
You must first begin at the ZERO setting, then set the shock to a soft setting of 20.

-Begin with the shocks adjusted to the ZERO rebound position (full stiff). Do this by rotating the rebound adjuster knob clockwise until it stops.

-Now turn the rebound adjuster knob counter clock wise 20 clicks. This sets the shock at 20. (settings 21-24 are typically too soft for street use).

Take the vehicle for a test drive.

-if you are satisfied with the ride quality, do not do anything, you are set!

-if the ride quality is too soft increase the damping effect by rotating the rebound knob clock wise 3 clicks. **CONTINUE ON NEXT PAGE.**

Take the vehicle for another test drive.

-if the vehicle is too soft increase the damping effect by rotating the rebound knob clock wise 3 additional clicks.

-If the vehicle is too stiff rotate the rebound adjustment knob counter clock wise 2 clicks and you are set!

Take the vehicle for another test drive and repeat the above steps until the ride quality is satisfactory.

Note:
One end of the vehicle will likely reach the desired setting before the other end. If this happens stop adjusting the satisfied end and keep adjusting the unsatisfied end until the overall ride quality is satisfactory.

STILL HAVE QUESTIONS?

Tech line hours
Monday - Friday
8AM - 6PM (EST) 812-482-2932