Edelbrock Pro-Flo EFI Fuel Rail
for Honda/Acura "B" and "D" Series
Catalog #4794, #4795, #4796, #4797, #4798, & #4799
INSTALLATION INSTRUCTIONS

PLEASE study these instructions carefully before installing your new fuel line kit. If you have any questions or problems, do not hesitate to contact our **Technical Hotline at: 1-800-416-8628,** from 7am-5pm PST, Monday-Friday , or via e-mail at: **Edelbrock@Edelbrock.com.** Please fill out and mail your warranty card.

- **DESCRIPTION:** The Edelbrock Honda/Acura Fuel rails, Part # 4794, 4796, and 4798, have been designed to fit stock, Edelbrock Victor X, or our Edelbrock Performer X manifolds using stock Honda injectors. Part #4795, 4797, and 4799 accept Bosch-style injectors. These fuel rails feature a flow-through design 5/8" fuel passage with -8 AN o-ring threads at each end. They are fully CNC machined from aluminum extrusions, polished, then hard anodized for use with racing fuel (including methanol and alcohol). These fuel rails also include a fuel regulator mounting at the end of the rail that can be used with stock or aftermarket regulators, as well as two auxiliary 1/8" NPT ports for pressure gauge, nitrous system fuel supply, etc.

- **KIT CONTENTS:**
  - ❑ 1 - Fuel Rail
  - ❑ 1 - Fuel Pressure Regulator Adapter
  - ❑ 1 - 12mm x1.0 Russell Honda Fuel Fitting (#4794, 4795, 4796 & 4797 Only)
  - ❑ 1 - 12mm x1.25 Russell Honda Fuel Fitting (#4798 & 4799 Only)
  - ❑ 2 - 6mm x1.0-20mm Socket Head Cap Screws
  - ❑ 2 - 1/8" NPT Pipe Plugs
  - ❑ 1 - Purge Bracket Kit (4798 Only)
  - ❑ 1 - O-Ring, 1/2" I.D. 1/16" Thick
  - ❑ 2 - O-Ring, -8 AN
  - ❑ 4 - O-Ring, 8mm I.D. x 2mm Thick
  - ❑ 3 - Fuel Rail Spacers (4797 Only)
  - ❑ 2 - M-8 Fuel Rail Spacers (4799 Only)
  - ❑ 2 - M-5 Fuel Rail Spacers (4799 Only)

INSTALLATION PROCEDURE

- **WARNING: When working with gasoline, always work in a well-ventilated area. Do not smoke, and keep all sparks, open flames, or other sources of ignition away from the work area. Failure to do so could result in a fire or explosion causing vehicle or property damage, personal injury, and/or death.**

- **BEFORE BEGINNING:** Make sure the engine is cool and the vehicle is on level ground. Disconnect the negative cable from the battery and remember to set the parking brake. It is recommended to clean the area surrounding the fuel rail as to avoid getting dirt or debris into the fuel system.

- **RELIEVE THE FUEL PRESSURE:** The fuel pressure must be relieved before removing the stock fuel rail. This will avoid fuel spillage in the engine compartment.
  1. Remove the fuel fill cap.
  2. Using a box end wrench, carefully loosen the banjo bolt at the fuel filter while holding the hex on the fuel filter with another wrench. Loosen the banjo bolt one full turn. If your vehicle has a special banjo bolt at the fuel filter, which has a service bolt in the top of the banjo bolt, use a 6mm box end wrench to loosen the service bolt at the fuel filter while holding the banjo bolt with another wrench ***(See Fig. 1)***. (**Note:** Place a shop towel or rag over the fuel filter while loosening the bolt to absorb any fuel spray ***(See Fig. 1).*** Also, it is recommended to replace the sealing washers between the banjo bolt and banjo fitting, or between the service bolt and the banjo bolt whenever the bolt is loosened.)
  3. Keep the banjo or service bolt loose until all pressure is relieved.

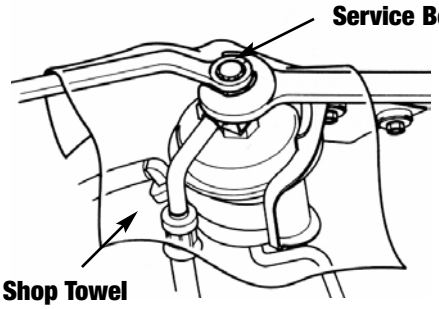

Fig. 1

- **FACTORY FUEL RAIL REMOVAL:**
  1. Remove the fuel injector wiring harness support from the fuel rail. Unplug the wiring from the fuel injectors (If your vehicle has a purge valve mounted on the fuel rail, unplug the wiring from the purge valve.)
  2. Disconnect the fuel inlet line from the fuel rail that leads from the fuel filter to the fuel rail. Disconnect the fuel return line and the vacuum line from the fuel pressure regulator. (If your vehicle has a purge valve mounted on the fuel rail, disconnect the purge valve hose). (**Note:** Place a shop towel or rag around fuel line connections before disconnecting to help soak up excess fuel.)

©2005 Edelbrock Corporation

3. Remove the fuel rail from the intake manifold being careful when separating it from the fuel injectors.
4. Disconnect the fuel pressure regulator from the fuel rail and set it aside. (If your vehicle has a purge valve mounted on the fuel rail, remove the purge valve and it's bracket and set them aside.)
5. Remove the fuel injectors from the intake manifold. Inspect o-rings (and fuel injector insulators if applicable) for any damage or wear and replace if necessary. If they are in good condition, they can be re-used (The upper o-rings can be discarded. They will be replaced by the four supplied 8mm I.D. x 2mm thick o-rings). Set the fuel injectors aside.

- **EDELBROCK FUEL RAIL INSTALLATION:** *(Note: The word "Lubricant" in the following installation instructions will refer to fuel system appropriate lubricants for assembly of fittings, o-rings, etc. Such as: clean engine oil, silicone spray lubricant, brake cylinder assembly lube, or o-ring lube)*

1. Install the factory fuel pressure regulator to the Edelbrock Fuel Rail using the Fuel Pressure Regulator Adapter, the two 6mm x 1.0-20mm long Socket Head Cap Screws, the 1/2" I.D. 1/16", and the stock fuel pressure regulator o-ring ***(See Fig. 2)***. (If your vehicle has a purge valve mounted on the fuel rail, attach the purge valve and bracket to the Edelbrock Fuel Rail at this time.)
2. Install the Russell Honda Fuel Fitting using one of the -8 AN o-rings, using a light coat of lubricant on the o-ring and the threads of the fuel fitting.
3. Using a light coat of lubricant on the four 8mm I.D. x 2mm thick o-rings, install the o-rings onto the factory fuel injectors. You may then install the factory fuel injectors into the Edelbrock Fuel Rail. (On fuel rails machined to accept Bosch style injectors, install them in the same manner as the stock injectors)
4. If the two 1/8" NPT ports are not going to be used, install the 1/8" NPT plugs using a liquid teflon or pipe sealant that is compatible with fuel on the threads and install them into the fuel rail. Make sure to let any pipe sealant or liquid Teflon fully cure before running fuel through the fuel rail.

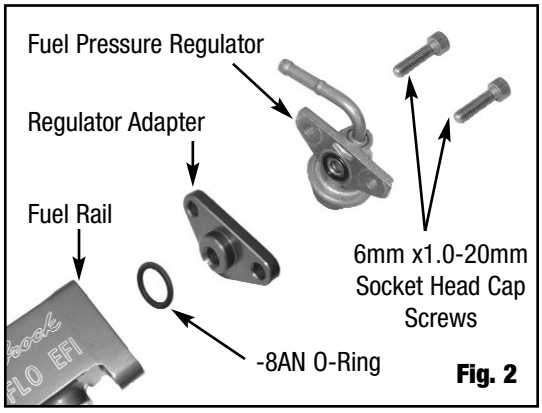

Fig. 2

5. Using a light coat of lubricant on the stock fuel injector o-rings and if applicable, fuel injector insulators, insert them back into the intake manifold. Carefully press the now assembled fuel rail with the fuel injectors into the intake manifold and secure with the factory hardware ***(See Fig. 3)***. (Fuel rails machined for Bosch-style injectors will require the use of the supplied fuel rail spacers. On fuel rail part #4797, install the spacers under the fuel rail. On part #4799, remove the fuel rail standoffs, and re-assemble with the M-8 spacers under the fuel rail standoffs, and the M-5 spacers under the fuel rail.
6. Re-attach the stock fuel inlet and return line. (On vehicles where the location of the fuel pressure regulator has been moved to the end of the fuel rail, replace the factory return line with a length of 6mm fuel hose if needed). (If your vehicle has a purge valve mounted on the fuel rail, re-attach the purge valve hose). Reconnect the fuel injector wiring harness and re-attach the fuel injector support to the fuel rail. Some applications may be attached by the fuel rail mounting hardware.

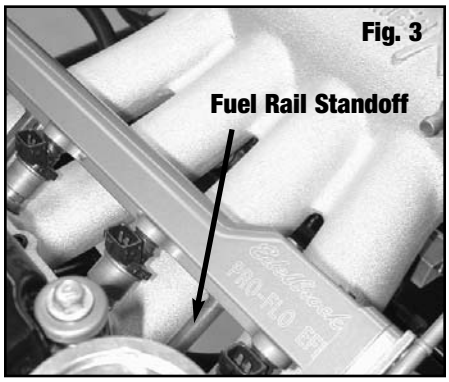

Fig. 3

- **NOTES FOR CUSTOM OR RACE FUEL SYSTEMS:**

1. The Edelbrock Honda/Acura Fuel Rails are equipped with -8 AN, o-ring threads at each end of the rail. Each end of the rail requires the use of a -8 AN, o-ring sealed fitting ***(For examples, see Fig. 4).*** Use a light coat of lubricant on the o-rings and threads of the fittings you use. A remote mounted fuel pressure regulator must be used with this setup.
2. The Edelbrock Honda/Acura Fuel Rails are equipped with two (2) 1/8" NPT ports on the top of the fuel rail. These can be used for a nitrous system fuel supply, or for a fuel pressure gauge sender. Use a small amount of fuel system safe liquid Teflon or pipe sealant on the threads of your fittings when threading them into the Edelbrock Fuel Rail. Make sure to let any pipe sealant or liquid Teflon fully cure before running fuel through the fuel rail.

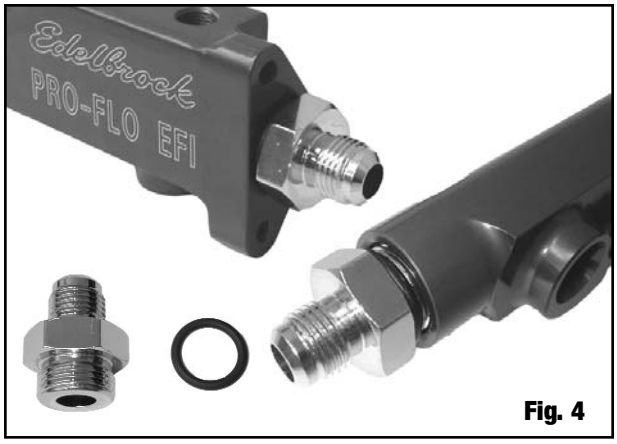

Fig. 4

Edelbrock Corporation • 2700 California St. • Torrance, CA 90503
Tech Line 1-800-416-8628 • E-Mail: Edelbrock@Edelbrock.com

©2005 Edelbrock Corporation