Installation Instructions Set# 5-3123

ENERGY SUSPENSION®
1131 VIA CALLEJON, SAN CLEMENTE, CA 92673

Carefully read the instructions before starting installation.

1. Properly support the vehicle on the frame.
2. Remove the lower control arm.
3. Remove the sleeve and rubber bushing (horizontal) from the front position of the control arm.
4. Remove the rubber bushing (vertical) from the rear pivot position.) **Do not press out the metal shell**. Use caution not to scar the inside of the shell when removing the bushing. NOTE: You must re-use inner metal sleeve, **DO NOT** damage or discard!
5. Clean I.D. of both horizontal and vertical positions free from all rubber.
6. Grease the I.D. and the face of the control arm and shell. Grease both the vertical and horizontal position thoroughly, including metal sleeves. Remember to also apply grease to the faces of the bushings.
7. Install the bushings and sleeves. (Per diagrams below)
8. It is extremely important that great care is given in placing the "vertical bushings" into the control arm. For explicit directions see diagram below.
9. Reinstall the control arm. To aid installation, install the rear vertical mount first. Note: It may be necessary to enlarge the pocket where the vertical bushing sits. Now push the strut and spindle out of the way and install the front (horizontal) bushing.

IMPORTANT: Coat polyurethane bushing, sleeve and arm I.D. with supplied grease. (All surfaces of bushings that contact metal)

"Horizontal" Bushing

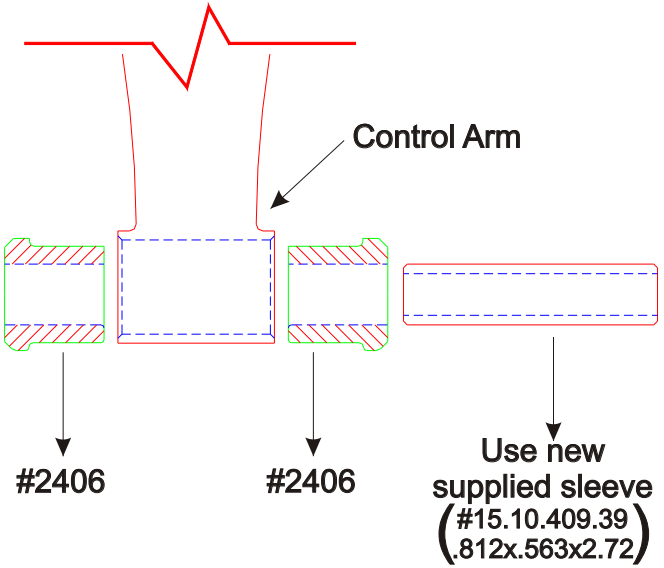

NOTE: Remember to remove any burrs from inside of the control arm to ensure proper operation.

"Vertical" Bushing

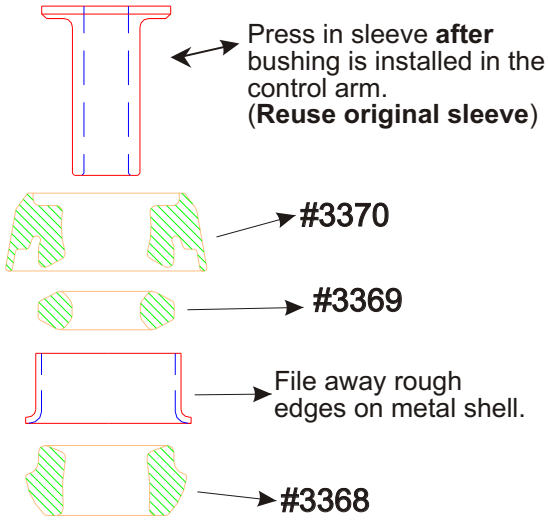

Warning!

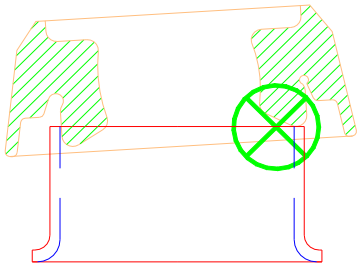

Place the upper vertical bushing #3370 in the metal shell first, this enables you to confirm that the inside edge of the bushing is not pinched at the top of the shell.

Neglecting this step could cause the bushing to bind and or eventually tear.

©2000 Energy Suspension. All rights reserved.
May not be reproduced, in any form, or by any means, without the written consent of Energy Suspension.

Lower Control Arm

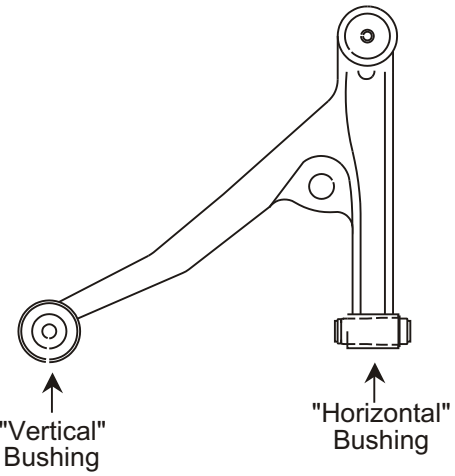

17311
2-11-00 NJT