RIDE-RITE
SPORT-RITE COIL-RITE
AIR HELPER SPRINGS

4111 / 4118
4150 / 4156
4164 / 4182
4188

www.riderite.com

Installation Instructions

READ INSTALLATION INSTRUCTIONS IN ITS ENTIRETY BEFORE INSTALLING YOUR COIL-RITE KIT

VEHICLE PREPARATION

With the vehicle on a solid level surface chock the wheels and raise the vehicle using a jack rated for your vehicle weight to lift the wheels off the surface. Remove the wheels. Lower the vehicle frame onto jack stands rated for your vehicles weight making sure the suspension is fully extended. (Do **NOT** use wood or concrete blocks to support the weight of the vehicle.)

SHOCK ABSORBERS

If necessary, additional clearance between the coil turns may be obtained by removing the shock absorbers from the lower shock mounts and lowering the suspension an additional one to two inches. (CAUTION: Do not put strain or tension on the flexible brake line.)

STEP 1—AIR SPRING PREPARATION

Cut a section of air line tubing approximately three inches in length. (Cut the tubing as squarely as possible.) Install the tubing into the push-to-connect air inlet on the air spring. Exhaust the air from the air spring by rolling it up toward the air inlet. After all the air is removed from the air spring install the hose plug into the end of the hose as shown in ***Figure "A"***.

STEP 2—INSTALLING THE AIR SPRING

Insert the top of the flattened air spring into the coil spring through the lowest opening with the push-to-connect air inlet at the bottom as shown in ***Figure "A"***.

STEP 3—ADJUSTING THE AIR SPRING

Push the air spring up into the coil spring by hand or with a blunt tool, such as a spoon shaped tire iron. Do NOT use anything with sharp edges or corners as this may damage the air spring.

When the air spring is completely within the coil spring, remove the plug and three inch tubing section by pushing the collar on the fitting towards the air spring and pulling on the tubing to remove. Allow the air spring to return to its normal shape.

STEP 4—REATTACH THE SHOCK ABSORBER

Attach shock absorbers if removed earlier in the installation.

STEP 5—ROUTE THE AIR LINE

Cut the remaining air line tubing into two equal lengths (cut the tubing as squarely as possible). Select a location for the inflation valves in a protected area, such as the bumper or trunk floor *(Note: The inflation valve will be installed in Step 6).*

Insert the air line tubing into the push-to-connect fitting on the air spring as far as possible. Route the tubing from the air spring to the inflation valve, making sure to avoid direct heat from the engine, exhaust pipe and away from sharp edges.

WARNING

Do not inflate this assembly when it is unrestricted. The assembly must be restricted by a coil spring. Do not ever inflate beyond recommended operating pressures for your specific vehicle. Improper use or over inflation may cause property damage or severe personal injury.

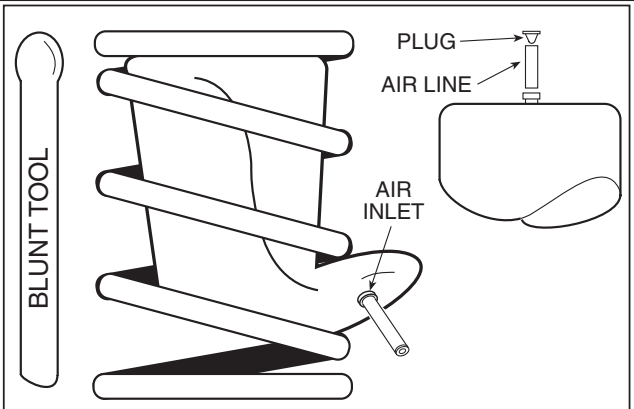

Figure "A"

RECOMMENDED OPERATING PRESSURES

PASSENGER CARS & SUV'S	**5-35 p.s.i.**

PARTS LIST

DESCRIPTION	QTY.
AIR SPRING	2
PLUG	2
18' AIR LINE	1
NYLON TIE	6
INFLATION VALVE	2
5/16" WASHER	4

AIR LINE INSTALLATION

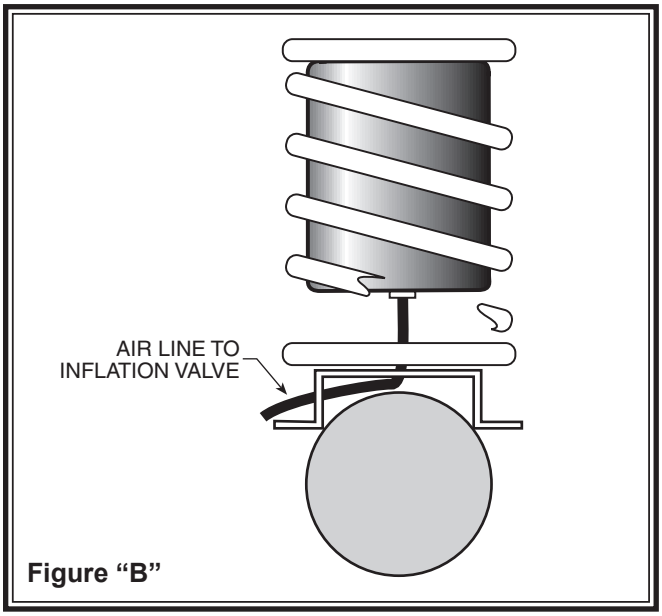

Figure "B"

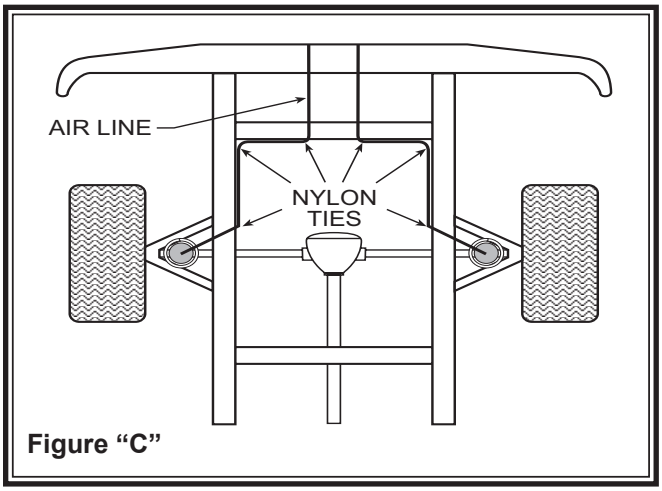

Figure "C"

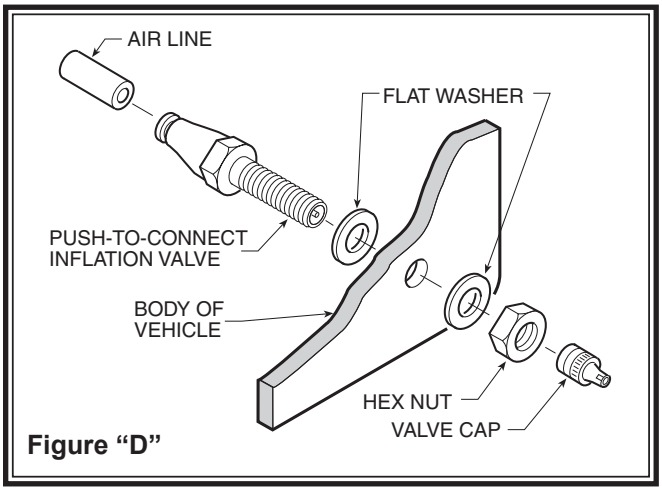

Figure "D"

Please take all necessary safety precautions when installing your Coil-Rite kit.

Secure with Nylon ties provided in your Coil-Rite kit.

STEP 6—INSTALL THE AIR LINE AND INFLATION VALVE

Select a location on the vehicle for the air inflation valves. The location can be located on the bumper or the body of the vehicle, as long as it is in a protected location so the valve will not be damaged, but maintain accessibility for the air chuck ***see Figure "C"***. Drill a 5/16" hole and install the air inflation valve using two 5/16" flat washers per valve as supports ***see Figure "D"***.

FOLLOW STEPS 1–6 FOR THE OTHER AIR SPRING.

STEP 7—INFLATE AND TEST

Inflate the air springs to recommended operating pressure (see Page 1 for operating pressures). With a soap and water solution, check for air leaks around the fittings and valve core. We recommend inflating and deflating in 5 p.s.i. increments to find the ideal riding condition for your vehicle.

STEP 8—COMPLETION

This now completes the installation. Install the wheels and torque the lug nuts to the manufacturers specifications. Raise the vehicle and remove the jack stands and lower the vehicle back onto the ground.

NOTE: CHECK AIR PRESSURE ON A MONTHLY BASIS.

Installation Instructions

READ INSTALLATION INSTRUCTIONS IN ITS ENTIRETY BEFORE INSTALLING YOUR COIL-RITE KIT

SWAY BAR LINKAGE LOCATED FORWARD OF THE AXLE MOUNTED TO THE OUTSIDE OF THE FRAME RAIL

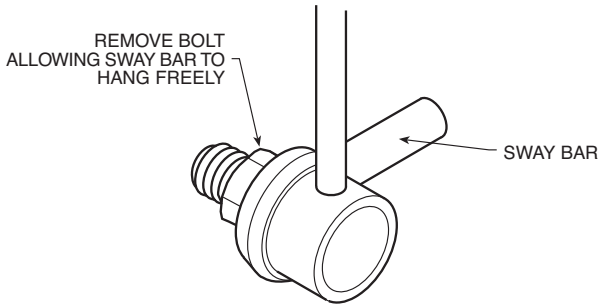

WARNING

Do not inflate this assembly when it is unrestricted. The assembly must be restricted by a coil spring. Do not inflate beyond recommended operating pressures for your specific vehicle. Improper use or over inflation may cause property damage or severe personal injury.

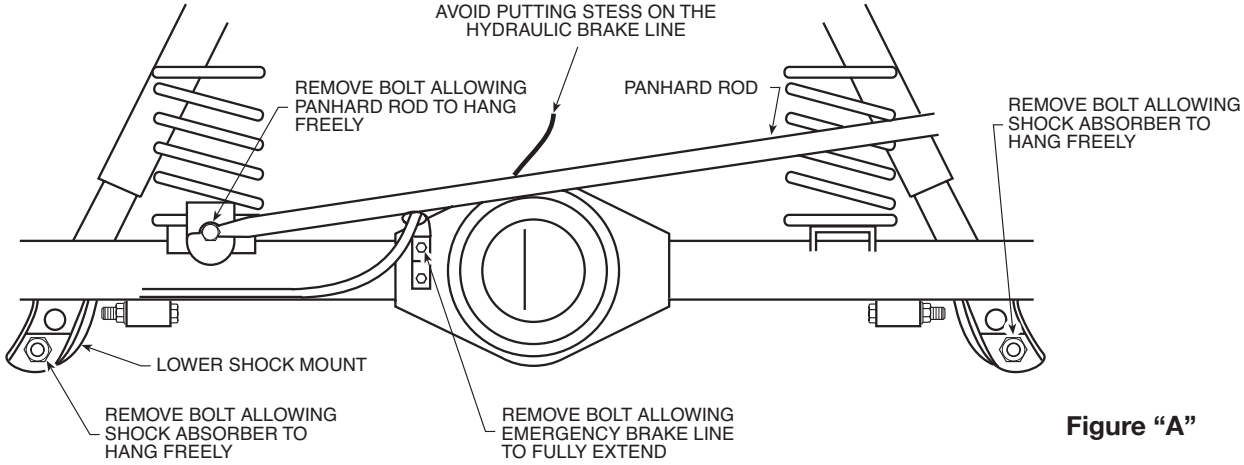

Figure "A"

STEP 1—VEHICLE PREPARATION

With the vehicle on a solid level surface chock the front wheels. Disconnect the negative battery cable. Raise the rear wheels of the vehicle using a lift or platform jack rated for your vehicle's weight at the center of the rear axle. Continue to raise the vehicle until the rear wheels are 8" off the ground. Lower the vehicle frame forward of the suspension onto jack stands rated for your vehicle's weight allowing the suspension to hang freely. (**DO NOT** use wood or concrete blocks to support the weight of the vehicle.)

In order to complete the installation of the air helper springs, it is necessary to remove the coil springs from the vehicle. With the vehicle resting on jack stands, jack the vehicle suspension from the differential up approximately 2" from its fully extended position. Remove the lower shock bolt and free the shock from both sides of the vehicle, ***see Figure "A"***. Then, detach the sway bar on both sides of the vehicle located forward of the axle mounted to the frame rail, ***see Figure "A"***. Now,

RECOMMENDED OPERATING PRESSURES	
SUVs	**5-35 p.s.i.**

PARTS LIST

DESCRIPTION	QTY.
AIR SPRINGS	2
PLUG	1
18' AIR LINE	1
NYLON TIE	6
PUSH-TO-CONNECT INFLATION VALVE	2
5/16" FLAT WASHER	4
THERMAL SLEEVE	2

remove the emergency brake cable clip located on the rear center of the axle allowing the emergency brake line to hang freely, ***see Figure "A"***. The panhard rod must be unbolted on the drivers side rear of the axle in order to lower the suspension to free the coil springs, ***see Figure "A"***. To remove the coil springs place a jack stand under the passenger side axle (leave the current jack stands under the frame in place) as close to the wheel as possible. Then lower the jack under the differential allowing the drivers side suspension to hang freely. Take special precautions not to overextend the the flexible hydraulic barke line, ***see Figure "A"***. Remove the driver's side coil spring and rubber overload bumper.

STEP 2—OVERLOAD BUMPER PREPARATION

To provide enough operating distance for the air helper spring the existing overload bumper must be modified. After removal of the overload bumper the four (4) convoluted sections of the bumper should be cut off. This is accomplished by holding the largest portion of the bumper in a vice and using a hack saw to remove the upper portion of the overload bumper see Figure "B". As a helpful hint use glass cleaner to lubricate the saw blade for easier cutting. The lower convoluted portion of the overload bumper will not be used. The upper portion will be needed to complete this installation, ***see Figure "B"***.

STEP 3—INSTALL THE AIR SPRING

Insert the air helper spring into the driver's side coil spring with the air inlet towards the top of the coil spring, ***see Figure "C"***. Cut the air line tubing into two equal lengths, making sure the tubing is cut as squarely as possible (a "saw" cut with a sharp knife is preferred). Insert the air line tubing into the push-to-connect fitting on the air spring as far as possible.

STEP 4—RE-INSTALL THE OVERLOAD BUMPER

After the air spring has been installed into the coil spring place the converted overload bumper back in its original position on top of the coil spring with the air line routed through the hole in the center, ***see Figure "C"***. The top of the air spring will be next to the bottom of the overload bumper. The coil spring will be re-installed after the air line has been inserted through the upper spring seat and installed in the air spring refer to the following step. Make sure that the bottom of the spring is seated in the spring retainer properly. Route the air line tubing through the top of the upper spring seat and through the hole in the overload bumper, ***see Figure "C"***

STEP 5—ROUTE THE AIR LINE

Route the air line from the air spring to the desired inflation valve location. Do not fold or kink the air line tubing.

With the tubing routed from the air spring to the inflation valve location, use the Nylon ties supplied to secure the air line tubing to the vehicle, ***see Figure "D"***. Be careful to avoid heat and sharp edges when fastening the tubing to the vehicle. Route the tubing away from the exhaust system.

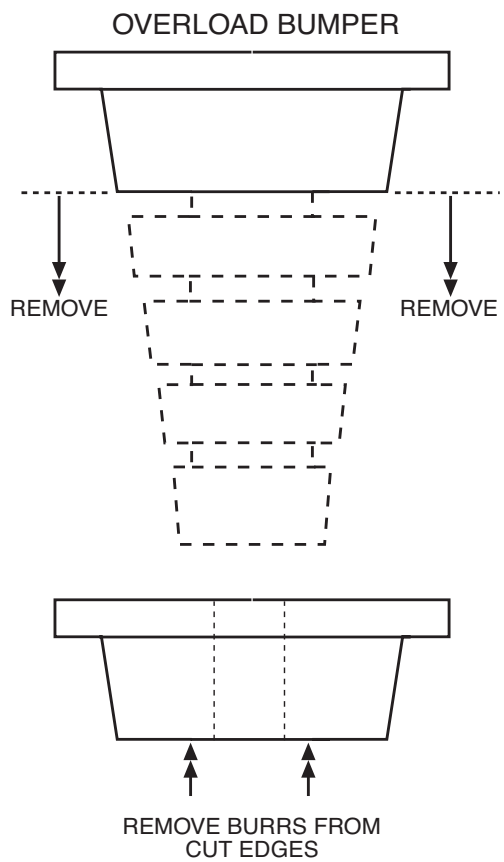

Figure "B"

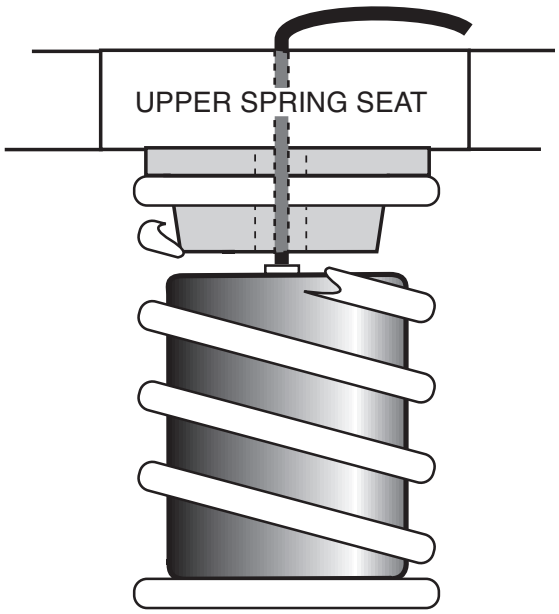

Figure "C"

COIL-RITE INSTALLATION PROCEDURE

STEP 6—INSTALL THE INFLATION VALVE

Drill a 5/16" hole where you wish to mount the inflation valve. Remember to keep the inflation valve in a protected area that is easily accessible. Attach the inflation valve to the bumper or body of the vehicle, ***see Figure "E"***.

Cut the excess air line tubing so that it will fit easily into the inflation valve, making sure the end is cut squarely (a "saw" cut with a sharp knife is preferred). Push the end of the tubing into the inflation valve as far as possible.

STEP 7—INSTALL THE OPPOSITE-SIDE AIR SPRING

Follow Steps 2-6 to install the second air spring on the remaining side of the vehicle. Note: Raise the axle by the differential approximately 2" and remove the jack stand under the axle on the passenger side and place under the drivers side of the vehicle. Lower the jack and allow the suspension to hang freely for installation on the passenger's side. Be sure not to over extend the brake line.

STEP 8—COMPLETION

This now completes the installation. Jack the vehicle up approximately 2" under the differential and remove the jack stand from under the axle. Reattach the panhard rod, emergency brake cable clip, sway bar links, and shocks. Inflate the air springs to 10–15 psi. Torque fasteners to manufacturers specifications. Raise the vehicle and remove the jack stands from under the frame and lower the vehicle to the ground. Re-attach the negative battery cable. Remove the wheel chocks from the front wheels.

STEP 9—INFLATE AND TEST

Check the recommended inflation pressure and inflate the air springs to recommended maximum operating pressure (see Page 1 for operating pressures). With a soap and water solution, check for air leaks around the fittings and valve core. We recommend inflating and deflating in 5 p.s.i. increments to find the ideal riding condition for your vehicle.

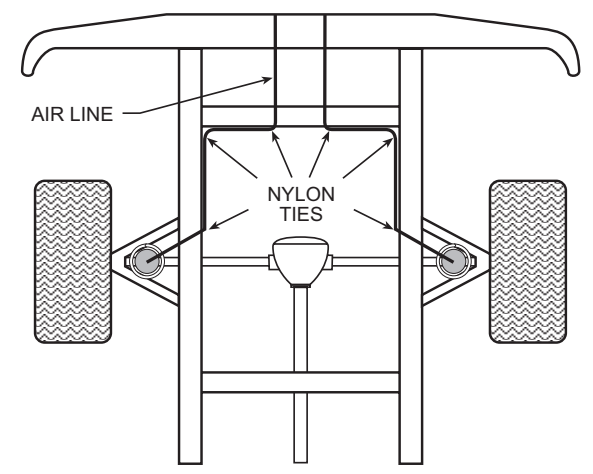

Figure "D"

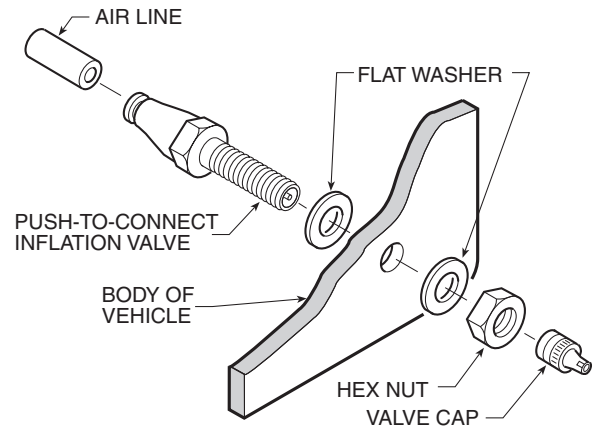

Figure "E"

FOR BEST RIDE use only enough air pressure in the air helper springs to level the vehicle when viewed from the side (front to rear). This amount will vary depending on the load, location of load, condition of existing suspension and personal preference.

NOTE:

MIN PRESSURE	**5 PSI**
MAX PRESSURE (LOADED)	**35 PSI**

NOTE: CHECK AIR PRESSURE ON A MONTHLY BASIS.

RIDE-RITE

SPORT-RITE COIL-RITE

AIR HELPER SPRINGS

www.riderite.com

Do Not Return This Product to the Dealer or Distributor

If you are

- **missing parts,**
- **experiencing installation problems, or**
- **have technical concerns regarding this product,**

you may contact a Firestone Technical Service Representative at **rrtech@fsip.com** or at 800-888-0650 (option 1, and then option 2). Representatives are available from 7:30 a.m. – 4:30 p.m. Eastern on Monday – Friday, excluding holidays. If you are located outside of the United States, you should first contact your distributor or dealer directly with any issues.

When contacting Technical Service, please have the kit or part # ready, along with the make, model, and year of the vehicle. You may also need to provide details, such as 2WD/4WD or if the vehicle has been lifted or lowered from stock height.

If you have a warranty concern, please include in your email a detailed description of the situation, a photo(s) of the issue, and your contact information, including ship-to address.

WARRANTY COVERAGE*— The Ride-Rite™ kits, components, and accessories are warranted against defects in workmanship and materials. This warranty does not cover service or labor charges, neglect…to the product.

PERIOD OF COVERAGE:

- Ride-Rite air springs – Lifetime Limited
- Sport-Rite air springs – Lifetime Limited
- Coil-Rite air springs – Lifetime Limited
- Level-Rite air springs – Lifetime Limited
- Work-Rite load assists – 2 Years Limited
- Air-Rite accessories – 2 Years Limited
- Brackets, hardware, fittings, air line, and other components – 2 Years Limited

HOW TO MAKE A WARRANTY CLAIM — If you purchased your air springs in the U.S. or Canada and believe you have a part with a warrantable defect, call Firestone directly at 1-800-888-0650.

International customers should contact their distributors or dealers directly with any problems.

(*) Please refer to the “Firestone Limited Lifetime Air Spring Warranty” for details, terns, and conditions.

FIRESTONE LIMITED LIFETIME AIR SPRING WARRANTY

Firestone Industrial Products Company LLC ("Firestone") warrants that its Ride Rite Air Spring Assembly will perform according to the manufacturer's specifications for as long as the vehicle on which the system was originally installed is owned by the original retail purchaser. This limited warranty does not include installation or other service charges for replacement.

Warranty Period

The Air Spring is warranted for as long as the original purchaser owns the vehicle on which it was originally installed. The fasteners and upper and lower brackets which accompany the air spring are warranted for a period of twenty-four (24) months or 24,000 miles whichever occurs first. This warranty begins on the original retail delivery date.

What is Covered

Any implied warranties are limited in duration to the coverage period of this warranty (some states do not allow limitation on how long an implied warranty lasts so the above limitation may not apply to you). This Warranty runs in favor of the original retail purchaser when the Ride Rite Air Spring Assembly is used under normal operating conditions according to Firestone's specifications and installed on the appropriate application. This warranty does not apply to Ride Rite Air Spring Assemblies that have been improperly applied, improperly installed, used in racing or off road applications or used for commercial purposes. In addition, the warranty will not apply to products which have not been maintained and serviced according to the instructions that accompany the air spring assembly. The consumer will be responsible for any costs incurred in removing the product from the vehicle and the cost to return the air spring assembly to the dealer or installer from which it was purchased. If it is determined that the Ride Rite Air Spring Assembly failed as a result of a manufacturing defect, Firestone will repair or replace, at its option, any product or components subject to this warranty. You should retain a copy of your contract with your installer and your receipt as proof of the date of installation. This warranty is non-transferable and is not assignable in any way.

Firestone specifically excludes any obligation for consequential damages or incidental expenses including claims for loss of use of the product, loss of time, inconvenience, or commercial loss. This warranty gives you specific legal rights. You may also have other rights that may vary from state-to-state. Some states do not allow limitations on how long an implied warranty lasts or allow the exclusion or limitation of incidental or consequential damages. The above limitation or exclusion may not apply to you. There are no warranties, express or implied, including implied warranty of merchantability and fitness which extend beyond this warranty.

RIDE-RITE
AIR HELPER SPRINGS

Firestone
World's Number 1
Air Spring.
FIRESTONE INDUSTRIAL PRODUCTS COMPANY