DRAGON CLAW

10-12 5.4 SHELBY 26 SPLINE

***This Kit Requires a Min. 1 ⅝ in. Working Input Shaft Splines.**

***Professional Installation recommended**

***Power/Air tools NOT advised**

---

1. Remove transmission assembly per shop manual. (Inspect input shaft splines for damage or burring.)

2. Remove existing clutch and flywheel assembly.

3. Remove and install new **pilot bearing (17)**.

4. Install new **flywheel (1)**. Reinstall the factory flywheel bolts and torque them per shop manual. (***Caution:*** Overtightening of flywheel bolts may result in crankshaft damage and oil leaks at the rear main seal.)

5. Install **inner clutch disc (5)** and **floater (6)**. Install with sprung hub toward the flywheel or markings "floater side" toward the floater. Use supplied **alignment tool (17)** to align clutch disc and keep it centered. Attach **floater straps (7)** with **locking nuts (8)** to attached **floater studs (3)** with **floater stands (4)**. Torque bolts to 25 ft-lbs. (***Caution:*** Double check strap alignment before torquing.)

6. Install **flywheel stands (10)**. Install **outer disc (9)** and **cover assembly (11)**. Outer disc hub should be outward facing away from the crank toward the transmission or markings "floater side" toward the floater and "trans side" toward transmission. Carefully align flywheel studs to cover through holes. (Flywheel studs are clocked to allow assembly in correct position only.) Tighten 12-point 3/8" flange nuts (12) to 35 ft-lbs using a star pattern to draw cover down as evenly as possible.

7. On the stock Shelby GT 500, it will be necessary to replace release bearing and add shims behind the clutch slave and release bearing assembly. Add supplied **shims (16)**. Install the new bearing using supplied (longer) **bearing bolts (13)** that replace the short stock bearing bolts. Torque per shop manual.

8. Reinstall transmission assembly taking caution not to hang transmission on the clutch disc or forcing splines into clutch disc. It is also recommended to put transmission in gear before installation. This will aid in the spline alignment by being able to turn the input shaft with the output shaft, or by slightly rocking the transmission back and forth.

9. Fully bleed clutch system. This can be accomplished by working the pedal as many as 50 or more times until the pedal feels pressure in full stroke.

Product Insert # 199R11065
Part Number 96-206

Patented Technology:

The centrifugal lever-assist technology yields higher clamp load and torque capacity without increasing the pedal effort. How does it work? As engine RPMs increase the lever is forced to fly outward. As this happens, the lever pivots and applies direct pressure to the pressure plate. The graph below shows the patented levers increase torque capacity by 15% at peak torque RPM!

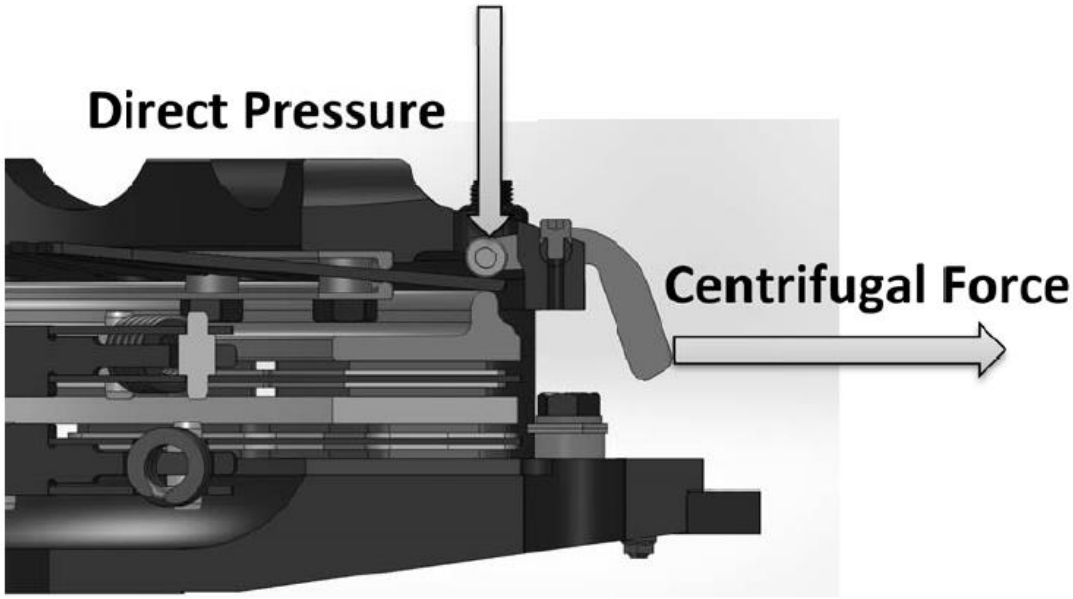

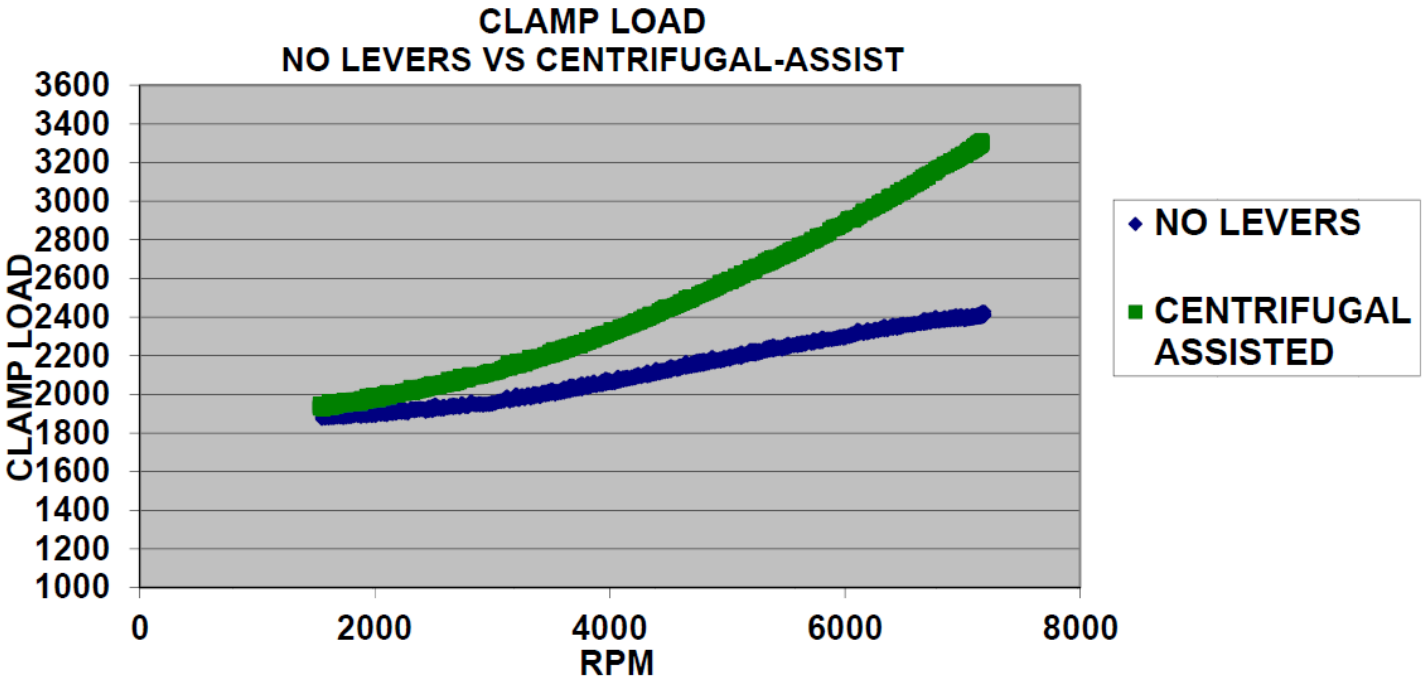

PARTS LIST						
#	**Description**	**Qty**		**#**	**Description**	**Qty.**
1	Flywheel	1		10	Outer Disc	1
2	Flywheel Studs	6		11	Cover/Diaphragm/Pressure Plate Assembly	1
3	Inner Disc	1		12	12 Point 3/8” Flange Nuts	6
4	Flywheel Stands	6		13	Set Screws	2
5	Floater Straps	3		14	Alignment Tool	1
6	Floater	1		15	Release Bearing Bolts	2
7	Floater Studs	3		16	Pilot Bearing	1
8	Floater Stands	3		17	Flywheel Bolts	8
9	Locking Nut	3		18	Shims	TBD*

Number of shims to be determined by application

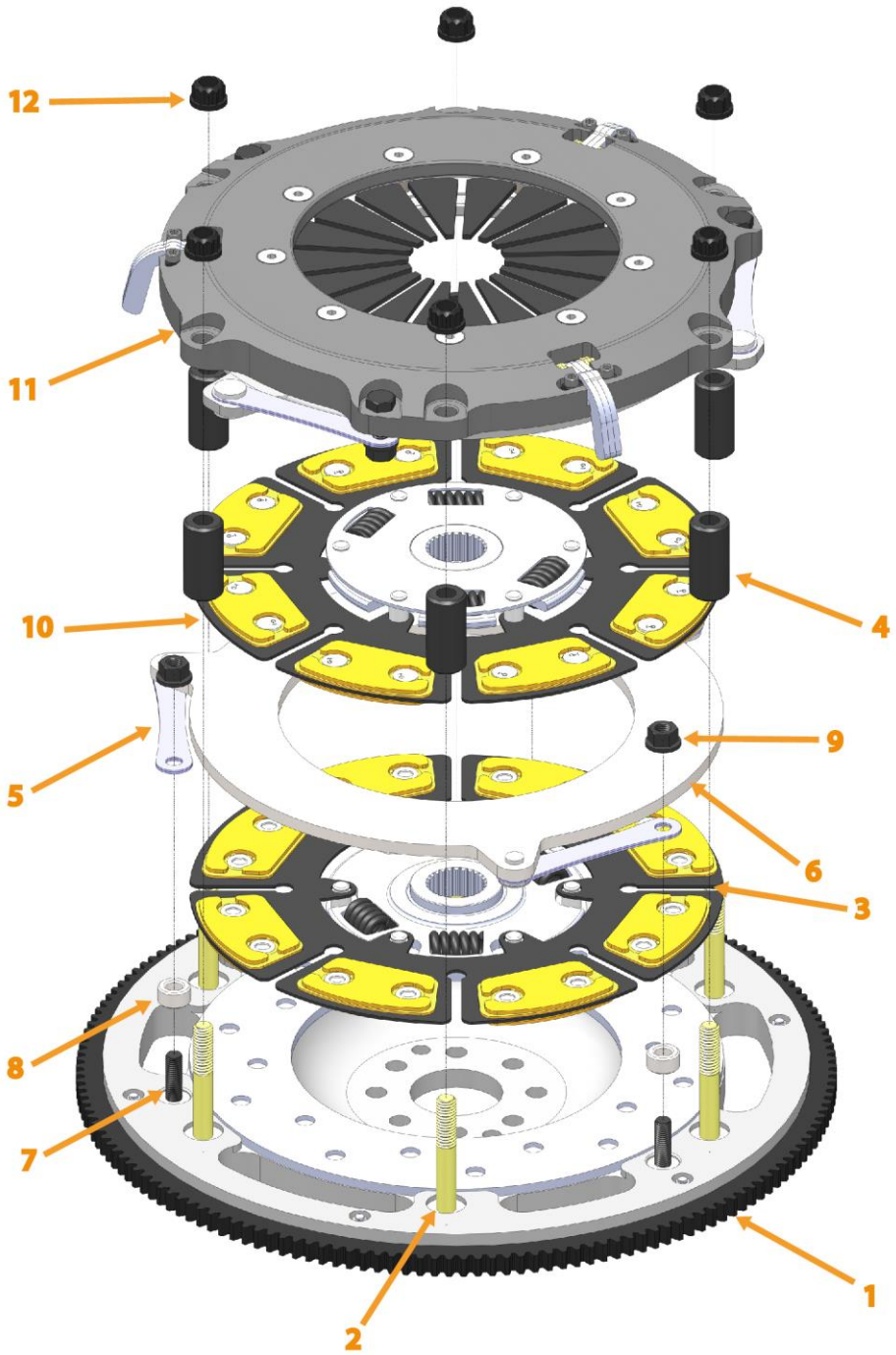

BEARING SETUP TOOL

1. With tool removed from packaging, loosen center thumb screw to allow the locator to move freely.

2. Place tool with arch opening over the installed clutch assembly resting the feet firmly against the block or the block plate where the bell housing mates against the engine. (If straight edge bar causes interference, it can be removed for additional clearance.)

3. Slide locator toward clutch diaphragm fingers where the release bearing will ride. Tighten thumb screw.

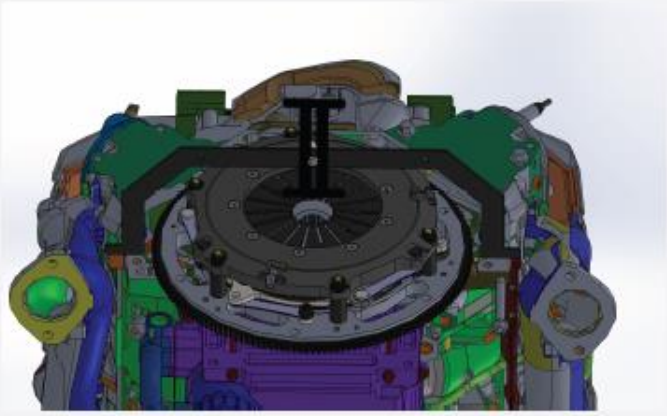

4. Now the setup tool is set. (Reinstall straight bar if removed in Step #2.)

5. Place the straight edge bar of the tool flat across the bell housing mating surface.

6. The Flat edge of the locator is where the release bearing needs to set 0/- 1/8 inch.

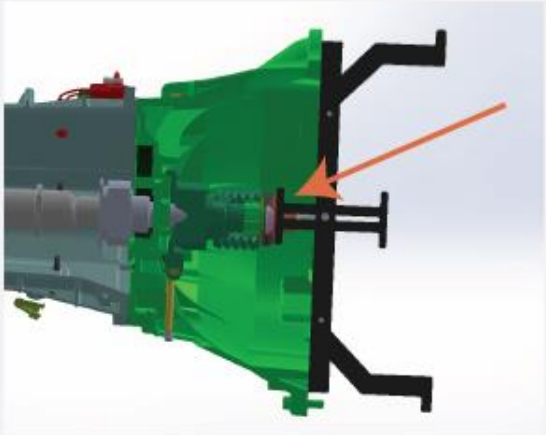

Locate Bearing to this Point 0/- 1/8 inch

7. Bearing adjustment is to be determined by the type of bearing to be used per application.

BEARING SETUP TOOL

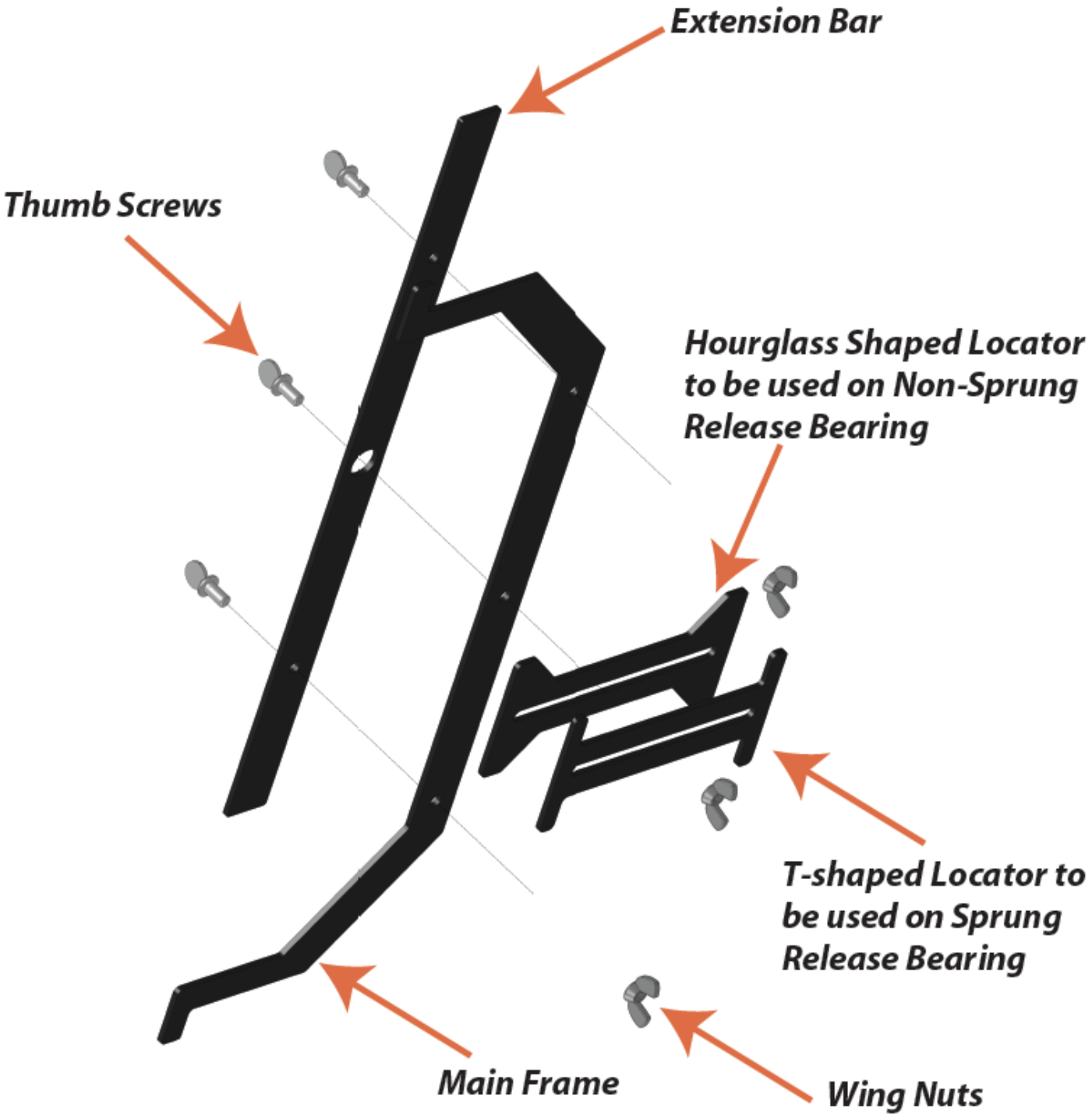

HAYS LIMITED WARRANTY

Due to the intended use of this product, warranty is limited to 90 days from the date of initial retail purchase. The product shall be free of defects in material and workmanship. Friction materials in this product are excluded. No warranty is offered for durability or specific performance because this is a consumable item. Hays is not responsible for the failure of mating components and/or other components of the driveline. Improper installation or improper application voids any warranty. If slippage occurs after installation stop use immediately and contact customer support. All products must be sent back to place of purchase for evaluation for warranty.

Clutch problems are frequently attributed to adjustment and/or release system malfunction.

*Before removal of the product for possible warranty, please refer to shop manual on operation and adjustment of the release system or proper release. The following list is common issues that are not covered under warranty.

- Worn Diaphragm fingers
- Hot spots on friction surfaces
- Lubricant on friction surfaces
- Damaged or worn friction material
- Damaged or broken disc hub and/or carrier
- Broken hub springs
- Worn bearing face
- Broken bearing seal

Hays Technical Support
1-866-464-6553

Product Insert # 199R11065
Part Number 96-206