1980-1996 F-150 Bronco 4WD
8” Suspension Lift
Installation Instructions

BEFORE beginning the installation read these installation instructions and the enclosed driver "WARNING NOTICE" thoroughly and completely. Also affix the "WARNING" decal in passenger compartment in clear view of all occupants. If any of these items are missing from the instruction packet, do not proceed with installation, but call Skyjacker to obtain needed items. If you have any questions or reservation about this kit, call Skyjacker to obtain needed items. If you have any questions or reservations about this kit, call Skyjacker at 318-388-0816 for technical assistance or customer service.

1. Make sure you park the vehicle on a level concrete or asphalt surface. Many times a vehicle is un level (side-to-side) from the factory, but usually not noticed until a lift kit has been installed make the difference more visible. So using a measuring tape, measure the front and rear (both sides) from the ground up to the center of the fender opening above the axle. Record below for future reference. **(Note: Due to OEM inconsistency and the available options, the amount of lift gained by this lift kit can vary as much as ½".**

   Driver side Front: _____ Passenger Side Front:_____

   Driver Side Rear: _____ Passenger Side Rear: _____

To Install Front:

2. Raise front of vehicle and support securely with jack stands under the frame behind the radius arms and block the rear wheels. Remove the tires and shocks. Now remove drag link assembly from the pitman arm and lower assembly down. If your vehicle has a front anti-sway bar, remove the brackets that hold it to the frame. Disconnect the vent hose from the front axle housing.
3. Refer to the front Brake Line (FBL80) instructions at this time.
4. With floor jack under the front differential and light pressure applied, remove the 3 rivets and 2 bolts (5 rivets on early models) from the left, driver's side, radius arm bracket. Unbolt racket from radius arm and discard bracket. (See illustration #3).
5. Remove the upper four bolts from the center hinge bracket of the left front axle beam. Lower the axle beam down, remove axle beam bolt from bracket and discard bracket.
6. Remove jack from under front differential and place under the right front axle beam between hinge bracket and coil spring with light pressure applied. Remove the upper bolts from center hinge bracket, remove axle beam bolt and discard bracket. Lower down jack.
7. To install new left front hinge bracket, it will be necessary to remove bolt on cooler coil if so equipped. Place backing plat against the front of crossmember behind the cooler coil. Install the top 2 bolts on the backside of the bracket. (See illustration #1). On the front side start bolts from the inside of bracket going through the crossmember then backing plate with washers and nuts on the outside. Now swing axle beam up and insert original hinge bolt. Tighten all bolts on the bracket at this time including hinge bolt.
8. There is one upper hole that needs to be drilled out on the crossmember. Align drill bit through the hole on the backing plate and drill it out, install bolt and tighten. If equipped with cooler coil, drill a ¼" hole through backing plate, crossmember and center hinge bracket in approximate location of original hole. Install the new ¼" bolt/washer through cooler coil clamp into new hole. Tighten nut.

9. Place jack under right front axle housing beneath the coil spring and remove the right radius arm bracket as in step #4. Now go to the right center hinge bracket. Remove rivet from the original bracket at the rear upper left on crossmember and drill out hole to ½".
10. Place backing plate against rear of crossmember. (See illustration #2) While holding up the new bracket, install the 9/16 x 3 ½" bolt in the upper axle beam hole going through the packing plate first. Now install ½" x 1 ½" bolt in the upper left hole of backing plate *this is the hole where the original rivet was removed and drilled out.) Tighten both of these bolts. Being sure the bracket is vertical, drill the 3 remaining ½" holes. Install and tighten ½ x 1 ½" bolts. Tighten all bolts. Swing axle beam up, insert original metric hinge bolt and tighten. **(NOTE: THIS BRACKET SHOULD BE WELDED TO THE FRAME SO THAT THE BRACKET BECOMES PART OF THE FRAME TO ELIMINATE FRAME FROM CRACKING.)**
11. Reinstall front radius arm bushings on radius arm. (see illustration #3). Insert end of radius arms through bottom hole of brackets, and reinstall bushings on radius arm behind the brackets. Instead of using original steel flat washer, install new frame support bar with flat side of ends to the bottom and rounded portion to the top (see illustration #4). Install nut on end of radius arm but do not tighten.
12. Locate the rearward hole of the two holes under bottom of frame and drill out to accept ½" bolts for additional strength. Now raise brackets up to frame and start a ½" x 1 ½" bolt in that rearward hole under the bottom of frame. Install with the washer and nut on inside of frame (see illustration #3). Install a ½" x 1 ½" bolt in rear brace through original hole on the side of frame placing the washer and nut on the inside of frame. Tighten these 2 bolts. **(Note: Be sure frame is slick and nothing is protruding through frame between bracket and frame. Bracket must be flush against frame prior to drilling.)**
13. Drill the 4 remaining ½" holes through frame. Insert the 3 bolts on the side of frame from the outside with washers and nuts on the inside of frame. On the forward bottom hole, begin bolt from the inside of frame with the washer and nut on the outside. Tighten all bolts at this time including nuts on end of radius arms.
14. Leaving jack beneath coil spring, remove the coil spring. Install new spring and shock. Do this on each side. Be sure all bolts and nuts are tight. Reconnect vent hose to front axle housing and reconnect sway bar brackets.
15. Remove pitman arm at this time (a Puller may be necessary). Be careful not to damage threads of output shaft. Install new drop down pitman arm and tighten. Reinstall drag link at this time. It may be necessary to adjust toe-in and toe-out before driving vehicle to be aligned. If needed, adjust so that the front of the tires will measure about 1/8" toe-in with bias-ply tires, 0 or equal measurement if equipped with radials.
16. If front drive shaft is equipped with a rubber dust boot, remove drive shaft. Tape around u-joint ends so that bearing caps will not come off. Remove dust boot and check u-joints and yoke assembly for excessive wear. Repair, if needed, at this time. Install new slip yoke collar. This is a knock on collar. Be careful not to damage alemite. Grease alemite and reinstall drive shaft.

To Install Rear:

17. Raise rear and support securely with jack stands and block the front wheels. Remove the tires, shocks, u-bolts and vent tube on differential. **(Caution: the rear axle will now be free to move, so support securely on floor jack.)**
18. Refer to rear Brake Line (RBL80) instructions at this time.

For "SYSTEMS" with rear springs, continue, or else skip to step 20.

19. **Kits with new rear leaf springs:** Unbolt and remove the stock rear springs and bolt up the new rear springs (FR56S) with long end of spring towards rear bumper. (NOTE: on springs with a

bottom degree shim, thick end of shim must also be towards rear bumper.) Install the springs on top of the factory blocks (skip to step 22).

20. **Kits with rear blocks**: F150 models - Install the spacer blocks tall end toward bumper, between springs and original blocks. (This means the new block will be installed on top of the original block.) Bronco models - Install the spacer blocks, tall end toward the rear bumper, between springs and the original factory wedge.
21. **Kits with rear add-a-leafs:** Place a C-Clamp around the rear leaf spring pack within approximately 6" of each side of tie bolt and remove the tie bolt from spring pack. If part number is R3120S follow step 21A, or if R300S, follow step 21B below:

21a.) Open up bend clips on each end of spring, if so equipped. Remove C-clamps slowly. Place new add-a-leaf into spring pack so that leaves progress from longest down to shortest (usually installed under the top main leaf). Insert new tie bolt from the bottom going through original overload then the spring pack. Retighten C-clamps to help compress spring pack, tighten tie bolt and re-bend the bend clips back over spring leaves.

21b.) Install new add-a-leaf between the spring pack and original bottom overload leaf. Insert new tie bolt from the bottom going through the original overload, the new add-a-leaf and spring pack. Tighten nut and remove C-clamps from spring pack.

22. Using the floor jack, raise the axle up to rear springs. Be sure the spring tie bolts and block pins all align in proper holes. Install and tighten new u-bolts, shocks and tires. Reinstall vent tube on differential then lower vehicle to ground.

NOTE

IMPORTANT: BE SURE AND BLEED BRAKES BEFORE DRIVING!

Models equipped with a rear carrier bearing should lower carrier bearing after install of this lift. If a vibration is present, shim kit part WS325-7166 should be ordered and installed in rear. This will give additional rotation to differential.

All Ford independent front suspensions require front end alignment after changes are made. Your local front-end shop can do this. Toe-in and camber/caster adjustment is required. If needed, alignment bushings are available direct from Skyjacker (part #1032H for 0-2 ¾ degree adjustable camber caster shim). Be sure and have front end alignment checked periodically by a professional for your safety and longer tire life.

FINAL NOTES:

- After installation is complete, double check that all nuts and bolts are tight. (Do not retighten nuts and bolts where thread lock compound was used.)
- If new tires are installed that are more than 10% taller than original tires, the speedometer must be recalibrated for the rear wheel anti-lock brake system to function properly.
- With the vehicle on the floor, cycle steering lock to lock and inspect steering, suspension and driveline systems for proper operation, tightness and adequate clearance. Recheck brake hose/fittings for leaks. Be sure all hoses, including the rear, are long enough.
- Have headlights readjusted to proper settings.
- Have a qualified alignment center realign front end to factory specifications. Be sure vehicle is at desired ride height prior to realignment.
- Retorque all bolts after the first 100 miles.

Seat Belts Save Lives, Please Wear Your Seat Belt.

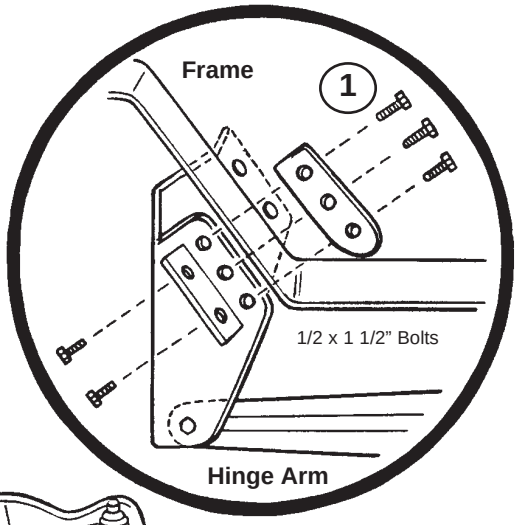
Frame
1
1/2 x 1 1/2" Bolts
Hinge Arm

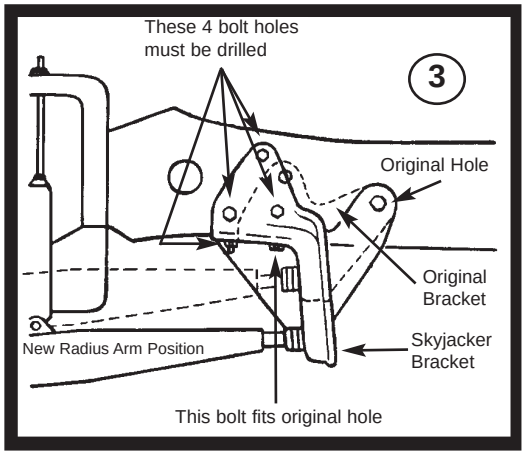
These 4 bolt holes
must be drilled
3
Original Hole
Original
Bracket
New Radius Arm Position
Skyjacker
Bracket
This bolt fits original hole

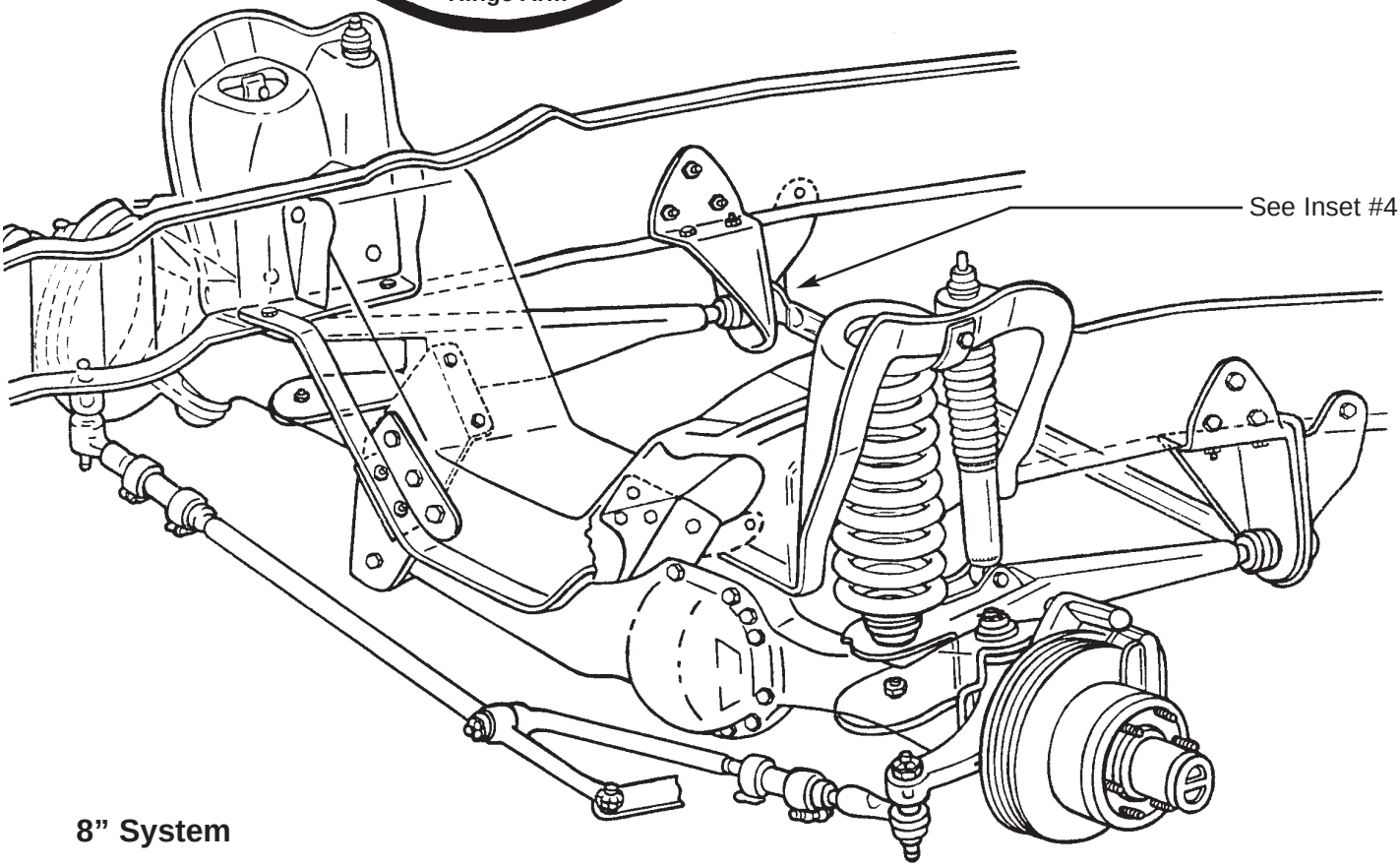
See Inset #4

8" System

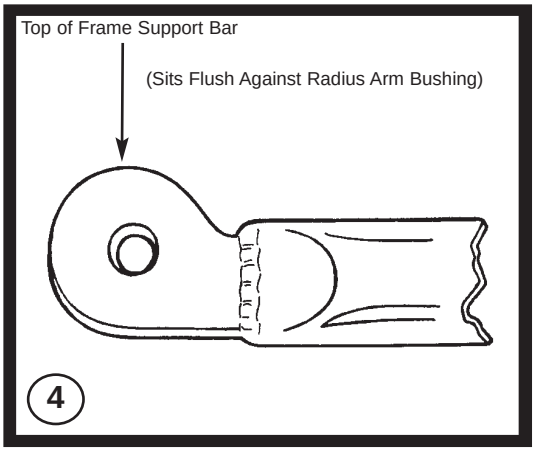
Top of Frame Support Bar
(Sits Flush Against Radius Arm Bushing)
4

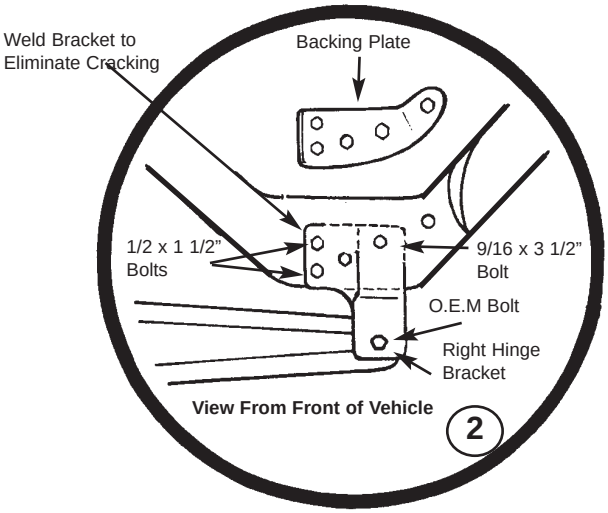
Weld Bracket to
Eliminate Cracking
Backing Plate
1/2 x 1 1/2"
Bolts
9/16 x 3 1/2"
Bolt
O.E.M Bolt
Right Hinge
Bracket
View From Front of Vehicle
2