FORD F150/BRONCO 80-96
CLASS II
INSTALLATION INSTRUCTIONS

Before beginning the installation, read these instructions and the enclosed driver's "WARNING NOTICE" thoroughly and completely. Also affix the "WARNING" decal in passenger compartment in clear view of all occupants. If you have any questions or reservations about installing this lift kit, call SKYJACKER® at 318-388-0816 for Technical Assistance or Customer Service departments.

Due to the inconsistency of vehicles when manufactured and the various options available, the amount of actual lift gained by this lift kit will vary.

PRE-INSTALLATION NOTES:

- A professional mechanic is recommended to perform the installation. Read the instructions *carefully* and *study* the illustrations before attempting installation.

- Check the parts and hardware against the parts list to assure that your kit is complete. The parts and hardware used are high grade and must not be substituted or replaced by inferior ones or failure may result. If any of these items are missing,call SKYJACKER® to obtain needed items. Placing the appropriate hardware with the corresponding brackets will save installation time. This kit is a bolt-on assembly. Do not weld the components to the vehicle, and do not weld anything to the components.

- Check the VEHICLE FRAME for any damage or severe corrosion. If there is any doubt as to the condition of the chassis, have a state approved alignment/frame specialist check the vehicle. If there is any structural damage, do not install this kit.

- Check the ALIGNMENT to insure that it falls within the factory specifications. The installation of this kit will not change the alignment of the vehicle more than +/- 1/2° from the factory specifications. If the vehicle cannot be brought to within factory specifications, adjustable camber/caster alignment shims may be required (order SKYJACKER® #1032H ea).

- Foot pound torque reading are listed on the Torque Specifications chart at the end of the instructions unless stated otherwise in an instruction step. Apply Loctite Retaining Compound on all bolts during installation. A drop on the exposed threads of a bolt before installing the nut will provide an adequate bond. Unless otherwise specified, all bolt should be installed with a flat washer at both ends, Loctite applied, then torqued to specifications.

- **DO NOT USE AN IMPACT GUN TO TIGHTEN ANY BOLTS.**

- Installation of this kit should take approximately 8-10 hours. Installation by a professional mechanic is recommended. Proper use of the appropriate power tools and the use of a shop hoist or lift can greatly reduce the installation time.

CLASS II #286PK-A

BOX COMPONENT LISTING:

Item Part#	Description	Qty.	Illustration#
BOX 1 of 4, **Coil Springs**			
184	4" front coil springs, pr	1	5
or 186	6" front coil springs, pr	1	5
BOX 2 of 4, #**284P, 284B, 286P, or 286B (*#284PS, 284BS, 286PS, or 286BS)**			
LHB542-5	Left axle beam pivot bracket	1	3
LHB542-5BP	Left axle beam pivot bracket doubler plate	1	3
RHB542-6	Right axle beam pivot bracket	1	4
BP125-1	Bump stop spacer	2	6
FA400	Drop pitman arm	1	--
HB-2846	Hardware bag	1	--
IF2846	Instruction packet (see breakdown)	1	--
#284P			
916x314x1112U	9/16 x 3 1/4 x 11 1/2 u-bolt	4	--
RB20	2" rear block	2	--
#284B			
916x314x1112U	9/16 x 3 1/4 x 11 1/2 u-bolt	4	--
RB35	2" rear block	2	--
#286P			
916x314x1312U	9/16 x 3 1/4 x 11 1/2 u-bolt	4	--
RB40	2" rear block	2	--
#286B			
916x314x1312U	9/16 x 3 1/4 x 11 1/2 u-bolt	4	--
RB50	2" rear block	2	--

NOTE: SYSTEMS with new rear springs do not include blocks (box 2 of 4 will end in “S”), but included but the corresponding rear springs instead.

HB-2846 Hardware Bag Breakdown:

916X312FTB	9/16 x 3 1/2" fine thread bolt, grade 8	1	4
12X112FTB	1/2 x 1 1/2" fine thread bolt, grade 8	10	3,4
716X112FTB	7/16 x 1 1/2" fine thread bolt, grade 8	6	3,4
516X1FTB	5/16 x 1" fine thread bolt, grade 8	2	6
916FTN	9/16" fine thread lock nut (8 for rear u-bolts)	9	1
12FTN	1/2" fine thread nut	10	3,4
716FTN	7/16" fine thread nut	6	3,4
516FTN	5/16" fine thread nut	2	6
916SAEW	9/16" SAE washer	2	4
12SAEW	1/2" SAE washer	20	3,4
716SAEW	7/16" SAE washer	12	3,4
516SAEW	5/16" SAE washer	4	6
LT100	Loctite retaining compound	1	All

BOX 3 of 4, #**RA150**

RA150-L	Left radius arm	1	5
RA150-R	Right (passenger side) radius arm	1	--
34STVCTN	3/4” stover course thread lock nut (shipped on arms)	2	2
SAB85	Polyurethane radius arm bushing kit	1	2
HB-RA150	Hardware bag	1	--

HB-RA150 Hardware Bag Breakdown:

12X3FTB	1/2 x 3" fine thread bolt, grade 8	2	5
12FTN	1/2" fine thread lock nut	2	5
12SAEW	1/2" SAE washer	4	5
716X112FTB	7/16 x 1 1/2" fine thread bolt, grade 8	8	1
716FTN	7/16" fine thread lock nut	8	1
716SAEW	7/16" SAE washer	16	1

BOX 3 of 4, #**SHOCKS**

	Front			
	---“54”	4" Front Shock w/Red Boot and Mounting Hardware	2	5
or	---“55”	6" Front Shock w/Red Boot and Mounting Hardware	2	5
	Rear			
	---“58”	Rear Shock w/Red Boot and Mounting Hardware	2	---
or	---“60”	Rear Shock w/Red Boot and Mounting Hardware	2	---

ACCESSORIES:

80-96 F150/Bronco	Single Steering Stabilizer	#7140
80-96 F150/Bronco	Dual Steering Stabilizer	#7240
80-96 F150/Bronco	Sway Bar Lowering Bracket Kit	#SBL20, 4” lifts
80-96 F150/Bronco	Sway Bar Lowering Bracket Kit	#SBL40, 6” lifts
80-96 F150/Bronco	Sway Bar Poly Bushing Kit, 1" bar	#FSB838
80-96 F150/Bronco	Sway Bar Poly Bushing Kit, 1 1/8" bar	#FSB818

more... Extended Stainless Steel Brake Lines, Cab Bushing kits, Kicker Shocks, Camber/Caster Shims, Rear Add-A-Leafs, Rear Springs, Body Lifts, Multiple Shock Kits...

FRONT INSTALLATION:

1. Block the rear wheels of the vehicle in front and behind the tires. Raise the front of the vehicle with a floor jack and support the frame with jackstands. Remove the front wheels and shock absorbers.

2. Separate the drag link assembly from the Pitman Arm. If your vehicle is equipped with a front anti-sway bar, remove the brackets that hold it to the frame.

3. Mark the front driveshaft and the front differential yoke so that the driveshaft can be reconnected in its original position. Failure to do so may result in a driveline imbalance and subsequent vibration. Disconnect the front driveshaft at the U-joint and tape the caps to prevent them from falling off. Be very careful not to pull the rear end of the driveshaft forward out of its splines or damage may occur to the transfer case due to improper reinstallation. Secure the end of driveshaft up and out of the way.

4. Disconnect both front brake lines at the calipers (be carefull to save the crush washers as they will be reused if original lines are reinstalled). Hang the open ends of the brake lines as high as possible to keep the fluid from draining out. Cover the open ends of the brake lines and calipers to prevent loose dirt from entering the braking system. Disconnect the vent hose from the front differential housing.

PERFORM STEPS 5 THROUGH 7 ON THE PASSENGER SIDE FIRST, THEN REPEAT THEM ON DRIVER SIDE.

5. Support the axle beam near the spindle with a floor jack. Support the beam at several points to prevent it from tipping or falling over. **NOTE:** The beam assemblies are very heavy so exercise caution when removing them to avoid any possibility to injury.

6. Remove the spring's lower retaining nut and washer, then remove the J-clip that holds the spring to the coil tower. **See Illustration #5**. Slowly lower the jack enough to remove the coil spring.

7. Remove the center pivot bolt from the end of axle beam. Remove the nut from the end of the radius arm towards the rear of the vehicle and carefully lower the end of the beam to the floor. **NOTE:** Support the front differential with a floor jack. In order to keep the beam from tipping to one side or the other, you must either chain the beam to the floor jack or use a second jack to support the beam near the spindle.

REPEAT STEPS 5 THROUGH 7 ON THE DRIVERS SIDE.

8. If the vehicle is equipped with a power steering cooler line (located on front bumper side of front crossmember), remove the two bolts that hold it to the front of the forward crossmember. Gently move the cooler line out of the way.

9. Some of the brackets that held the pivot end of the front axle beams to the front crossmember are bolted to the frame, some are riveted. These stock brackets must be removed from the crossmember by unbolting or drilling out the rivet heads. A right angle drill may be necessary to drill some of the rivets. See rivet removal steps below.

Remove the rivets as follows:

- Center punch rivet head
- Drill 1/4” pilot hole in center of rivet approximately 1/4” deep
- Drill rivet head off using a 7/16” bit, being carful not to drill into frame
- Drive rivet out with a hammer and punch

10. Remove the brackets that held the radius arms to the frame. Again, any rivets will have to be drilled out to be removed. **NOTE:** Be careful not to damage these original brackets because you will be reusing them. **See Illustration #1**.

11. The radius arm brackets removed in the previous step will be relocated **exactly 15”** toward the rear of the vehicle from their original location, **see Illustration #2**. Be carefull to relocate the brackets exactly 15” behind their original location.

12. After relocating the brackets, mark the new mounting hole locations on the frame using a center-puch. (**NOTE:** Before drilling holes, check inside frame rail for any obstructions or line interference. It may be necessary to reroute lines on certain model vehicles if they interfere with the relocated mounting brackets.) Now drill the holes using a 7/16” drill bit. Use a wire brush to remove any undercoating. The bracket must be installed on a clean surface.

13. Use a file to remove any raised edges around the hole caused by the drilling. Mount the brackets using the supplied 7/16” hardware as shown in **Illustration #1**. Apply Loctite and torque fasteners per spec. chart on the last page of the instruction sheet.

    NOTE: On later model vehicles, it may be necessary to relocate the fuel filter mounting bracket for clearance of the relocated bracket.

14. Install the left axle beam pivot drop bracket (actually located on the passenger side of crossmember - to the front, #LHB542-5) and the doubler plate (#LHB542-5BP) as shown in **Illustration #3**. The doubler plate mounts on the outside (front) of the crossmember and the beam pivot drop bracket mounts on the inside of the crossmember (in original location). Locate the bracket and plate onto the crossmember using the original holes and hold them in place with some of the original hardware, but do not tighten.

15. Still referring the **Illustration #3**, mark the four (3) new holes that are needed with a centerpunch. Remove the brackets and drill the necessary size holes (2 are 1/2”, 1 is 7/16”). File any raised edges. Clean the surface of any undercoating, loose paint, etc. Install the axle beam pivot drop bracket and the doubler plate with the specified hardware furnished using Loctite and torque per the Torque Specification Chart. On the double plate, center punch and drill a 7/16” hole approximately 1/2” from left edge as shown in illistration #3 and install new 7/16” hardware.

16. Reinstall power steering cooler line, if equipped, using original screw and clamp. You may use the original hole in double plate, as shown in illustration #3. However, make sure the lines do not rub or contact any of the bolts, bracket or metal surfaces. It may be necessary to bend the lines or clamps slightly to clear any obstructions.

17. Install the passenger side axle beam pivot drop bracket (actually located on the driver side of crossmember - to the rear, #RHB542-). Locate the drop bracket onto the crossmember, as shown in **Illustration #4**, install the new hardware beginning with the 9 1/4 16 x 3 11/42” bolt through the original hole, then install the two 11/42” bolts at top of bracket, next the three bolts on left “wing” of

bracket, and tighten all bolts. Now install and tighten the 7 1/4 16" bolt in top lip of left "wing". Mark the two new holes that are needed with a centerpunch and drill 11/42". Install and tighten bolts.

18. Remove the original radius arms from the front axle beams by removing the retaining studs from the top of the beams and the bolts from the bottom of the beams, see **Illustration #5**. Seperate the new radius arms for the driver and passenger side as labeled on the arms (be sure the correct side is up). Place the new radius arms onto appropriate axle beams, and reinstall the existing top studs and lower bolts using Loctite ant torque per the Torque Specification Chart.

WARNING

LOCTITE COMPOUND MUST BE APPLIED TO THE THREADS OF RADIUS ARM RETAINING STUD AND BOLT, MUST TORQUE TO A MINIMUM OF 180 FT. LBS.

19. Remove the original Pitman Arm from the steering box using a Pitman Arm puller. Failure to use the proper tool could result in damage to the steering mechanism. Install supplied Pitman Arm #FA400 into position, noting the indexing marks. Torque the nut per the Torque Specification Chart. (**NOTE:** Pitman Arm #FA400 for vehicles with Power Steering only).

20. Referring to **Illustration #2**, assemble the threaded end of the radius arms using the original retaining waher and the new polyurethane bushing.

21. Position the ends of the radius arms into the relocated brackets. Install the original plastic spacer, new polyurethane bushing, heat shield (if equipped), retaining washer and new 3 1/4 4" stover nut supplied. Do not fully tighten yet.

22. Using the floor jack, raise and position one of the axle beams into the new drop bracket. Insert the existing pivot bolt through the bracket and axle beam and install the nut. **Refer back to Illustration #3 & #4**. Do not tighten yet. Repeat this procedure on the other axle beam.

23. Check again, to make sure that all radius arm bushings and hardware is installed as was shown in **Illustration #2**. Apply Loctite and torque the radius arm nuts to 100 ft. lbs. ***(DO NOT EXCEED 100 ft. lbs. TORQUE)***. Torque axle beam pivot bolts to 180 - 220 ft. lbs.

24. Reinstall the front dirveshaft and torque the U-bolts to 12-15lbs.

25. Remove the factory bump stops from the frame. Install the original bump stop onto the bump stop spacers using the existing hardware as shown in **Illustration #6**. Mount the bump stop assembly onto the frame in the original location using the 5 1/4 16" hardware supplied. Repeat this procedure on the both sides. (New replacement polyurethane bump stops are available from SKYJACKER®.)

26. With the floor jack still supporting the axle beam, lower beam down enough to place new coil into spring seat. Install the spring's lower retaining washer and nut, then install the J-clip that holds the spring to the upper coil tower. Refer back to **Illustration #5**. Repeat this procedure on the both sides.

27. Install the appropriate length brake lines at this time (also available from SKYJACKER®). Bleed the brakes to remove any air from the lines according to factory recommendations. Reinstall axle vent hose.

28. If the anti-sway bar is mounted to a crossmember instead of the frame rails on your vehicle, it will be necessary to trim the cross member slightly. Full scale templates are included on page#12 of these instructions. Cut the templates out and trace them onto the crossmember as shown in **Illustration #7**. Remove the crossmember from the anti-sway bar and trim using a scroll saw or die grinder. File any sharp or raised edges and reinstall crossmember.

    For sway bar styles, other than the one listed above, SKYJACKER® offers sway bar lowering bracket kits (#SBL20 for 4" lifts, and #SBL40 for 6").

29. Re-install the anti-sway bar, and reconnect the drag link assembly to the new pitman arm. Install the front shock absorbers (11/4" hardware is supplied for mounting shocks to the new radius arm holes, **see Illustration #5**). Reinstall the tires and lower vehicle to ground.

30. Cycle the steering left and right from lock to lock and check for any binding or interference. There should be a minimum of 1.0" of clearance between the tires and the radius arms at full lock. If there is less than 1.0", check to make sure you have the proper wheel offset and size. If necessary, the steering stop bolts may be adjusted out to 1.25", maximum.

30. Front end realignment is necessary so have a *qualified* alignment center realign front end to factory specifications.

REAR INSTALLATION:

31. Place a floor jack under rear axle and raise vehicle. Place jack stands under the frame to support vehicle and remove the rear tires and shock absorbers.

32. Remove the axle U-bolts and lower axle down a few inches. Care should be take because when U-bolts are removed, axle can move freely.

33. BLOCK INSTALLATION: Place new block (tallest end toward rear bumper) between rear spring and original factory block or degree shim, if equipped. Raise axle up being sure that block pins are aligned and that spring bolt is aligned in block. Install and tighten new rear u-bolts evenly (torque u-bolts 90-95 ft.lbs.). Install rear shock absorbers, tires, remove jack stands and lower vehicle down. Skip to Final Notes.

34. NEW SPRING INSTALLATION: Remove the spring eye bolts and remove original springs from vehicle. Install new springs with the long end of spring toward the rear bumper (also, thick end of bottom wedge shim goes toward the rear bumper, if equipped).

35. Raise the rear axle back up, aligning spring pins into axle housing. Install and tighten new u-bolts evenly (torque u-bolts 90-95 ft.lbs.). Install rear shock absorbers, tires, remove jack stands and lower vehicle down. Skip to Final Notes.

FINAL NOTES:

- Before driving the vehicle, check to make sure the brakes are operating properly and need no further bleeding.
- Inspect the components for tightness and for any damage periodically, especially after off-road use.
- After installation is complete, double check that all nuts and bolts are tight. (Do not retighten nut and bolt where Loctite was used.) Check to ensure there is adequate clearance between All rotating, mobile and fixed members.
- Rotate driveshafts and check for interference at differential yoke and cardan joint. If necessary, lightly dress casting(s) and/or U-joint tabs in order to eliminate binding.
- On models with a rear carrier bearing, if a driveshaft vibration is present, the carrier bearing or its crossmember must be lowered.
- Ensure there is adequate clearance between exhaust and brakelines, fuel lines, fuel tank, floor board, and wiring harnesses. Check steering gear for interference and proper working order. Inspect brakelines for damage and adequate clearance. Test brake system.
- Have headlights readjusted to proper settings.
- Front end realignment is necessary so have a *qualified* alignment center realign front end to factory specifications.

TORQUE SPECIFICATION CHART:

5/16"	Bolts	13	Ft.-Lbs.
7/16"	Fine Thread Botls	55-58	Ft.-Lbs.
1/2"	Fine Thread Bolts	85-90	Ft.-Lbs.
9/16"	Fine Thread Bolts	115	Ft.-Lbs.
9/16"	Rear U-bolts	90-95	Ft.-Lbs.
Spring Retainer - Upper Spring Seat		13-19	Ft.-Lbs.
Radius Arm - Axle Beam (stud & bolts)		180-220	Ft.-Lbs.
Lower Spring Retainer - Radius Arm		30-70	Ft.-Lbs.
Pitman Arm - Steering Gear Nut		170-228	Ft.-Lbs.

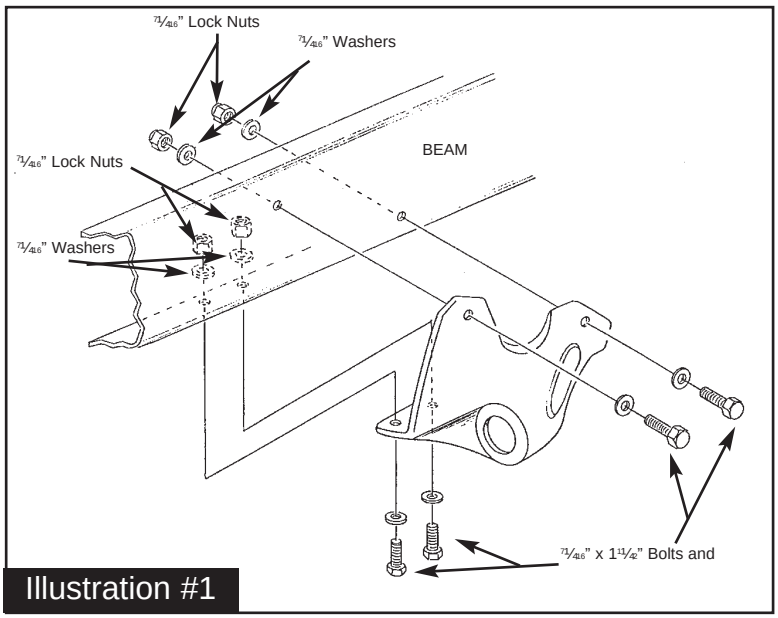

Illustration #1

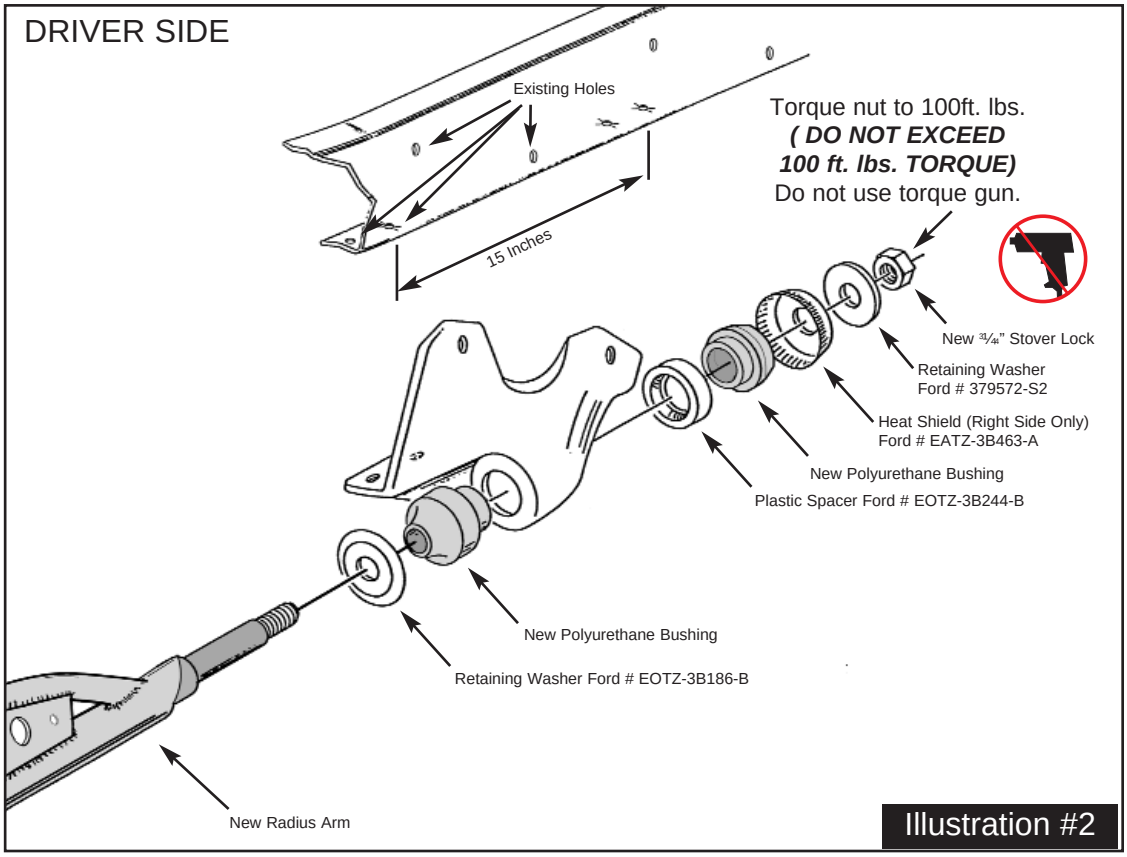

Illustration #2

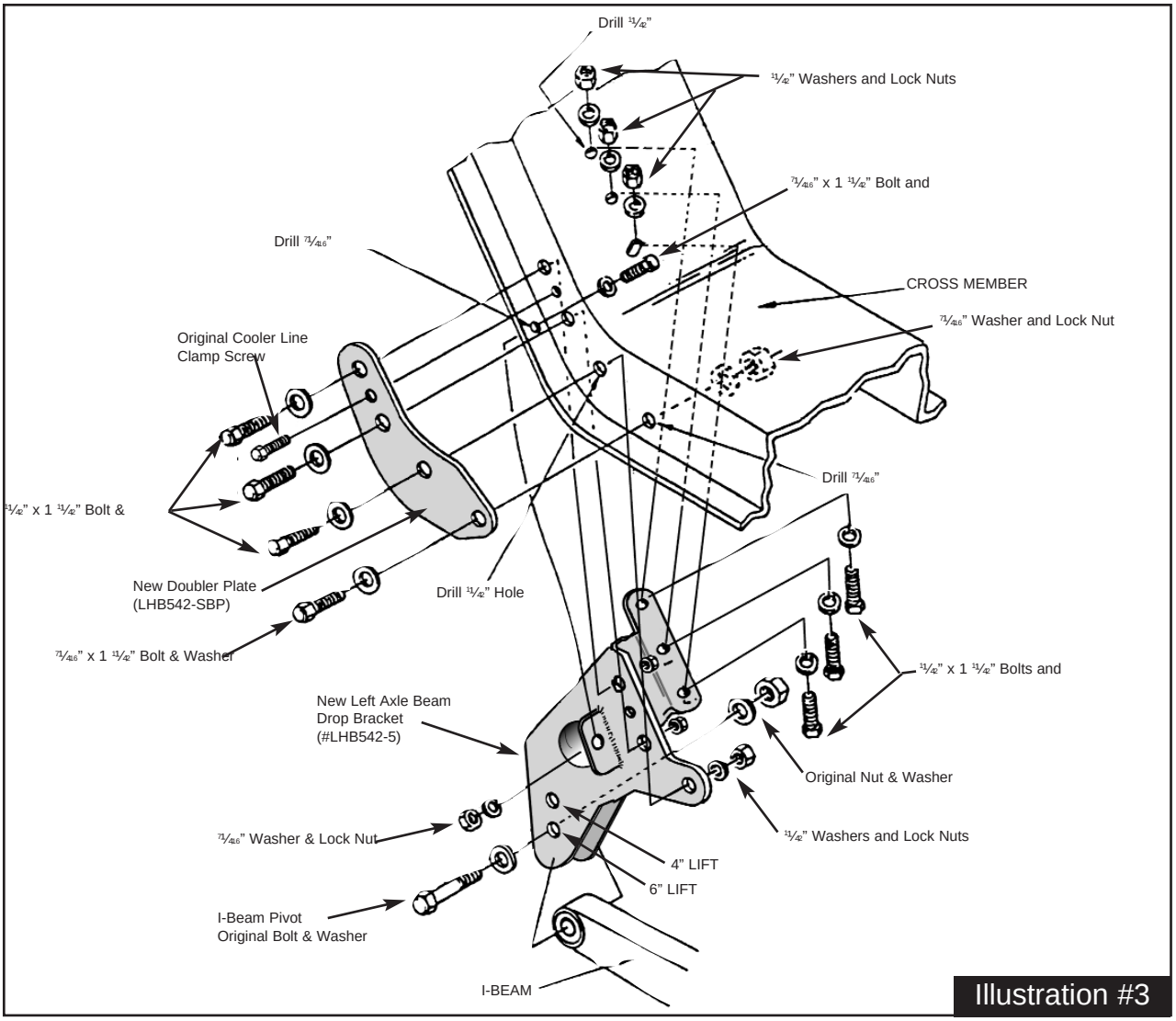

Illustration #3

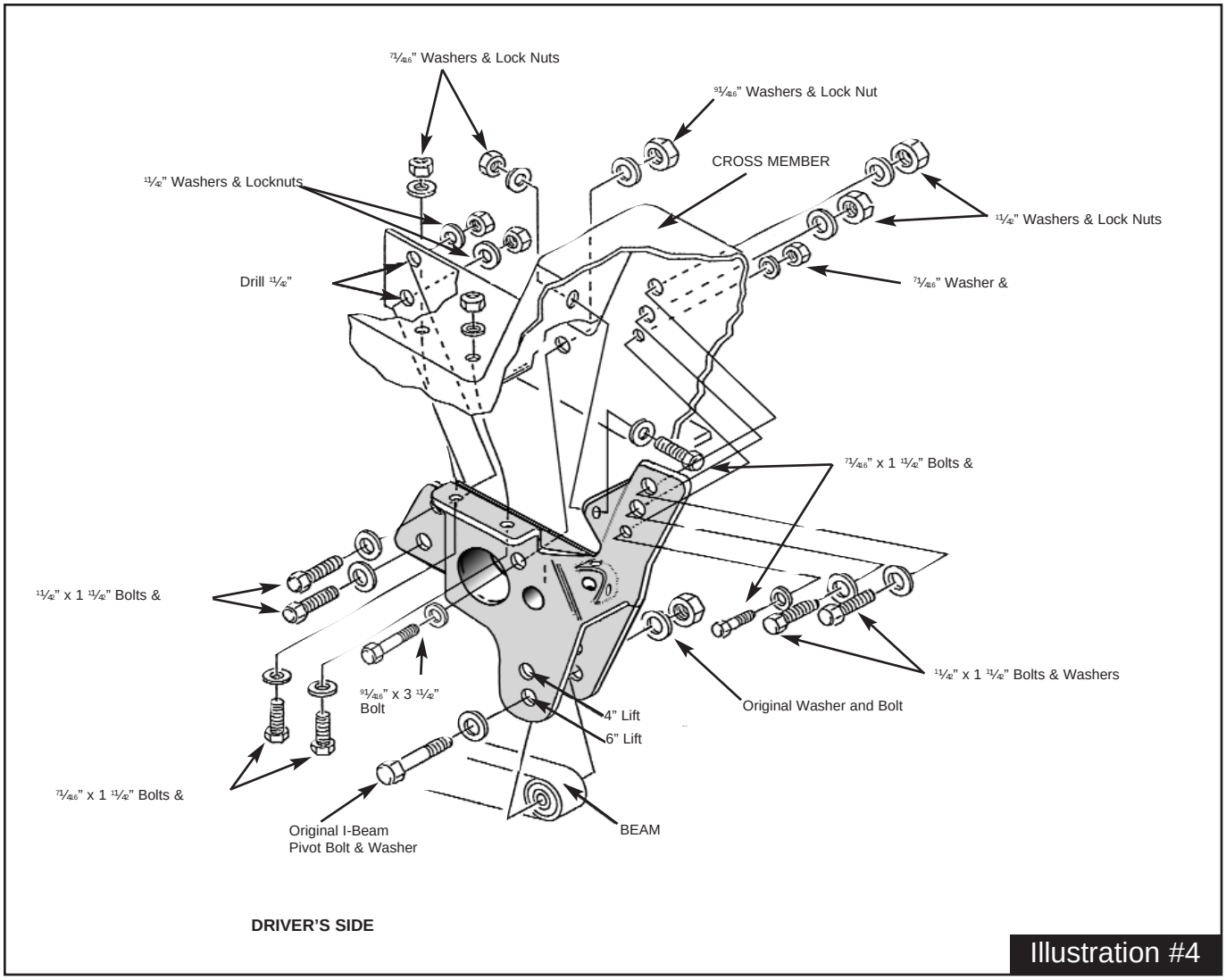

Illustration #4

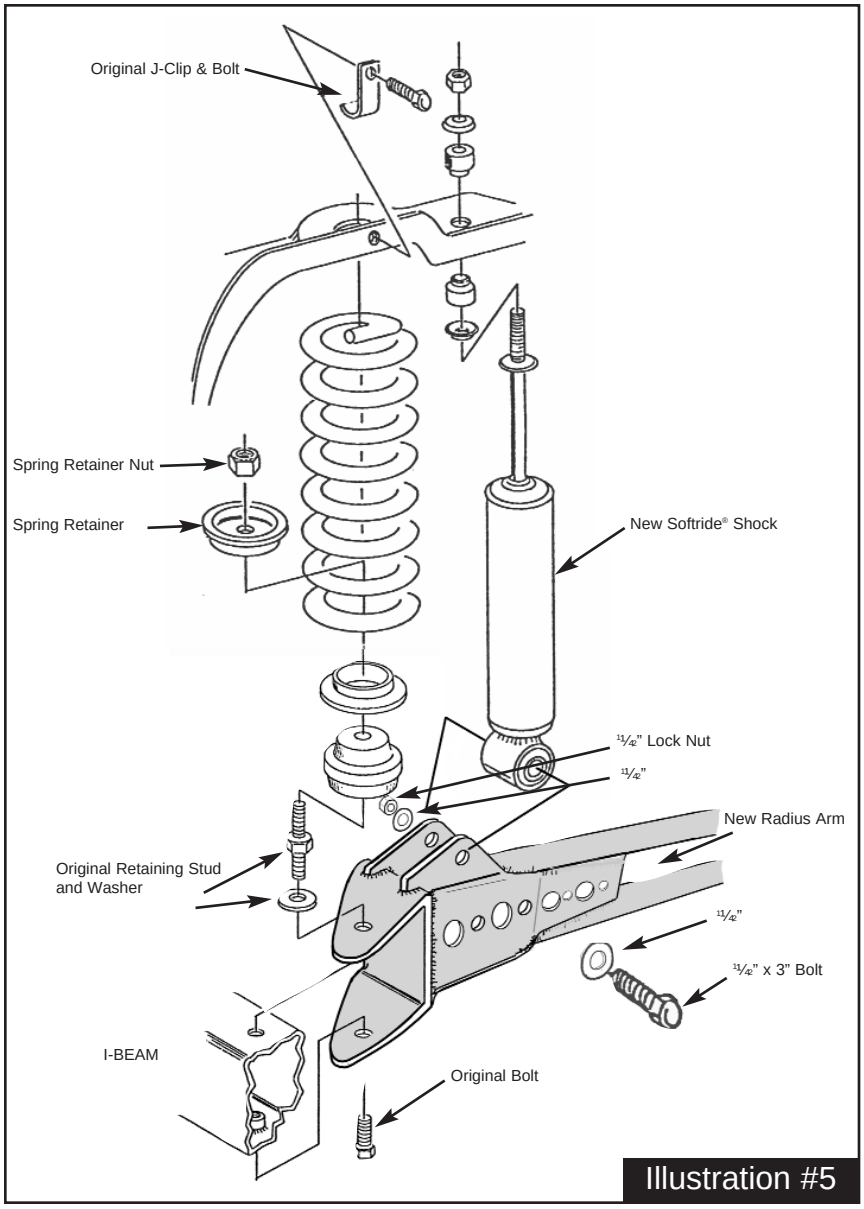

Illustration #5

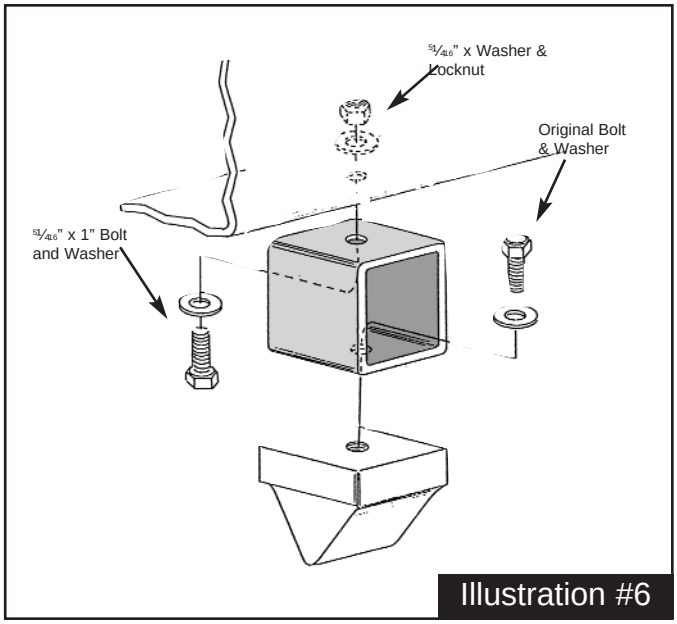

Illustration #6

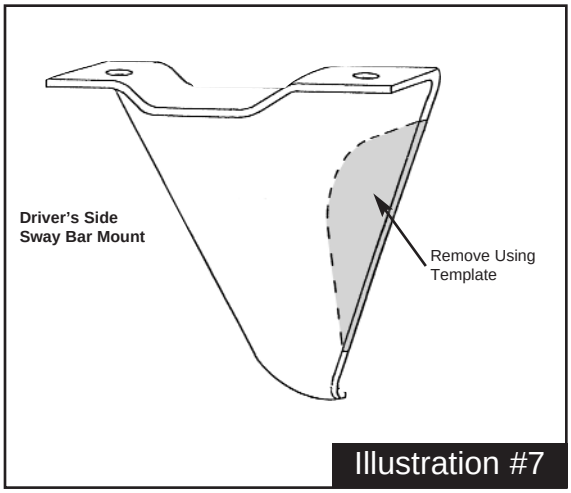
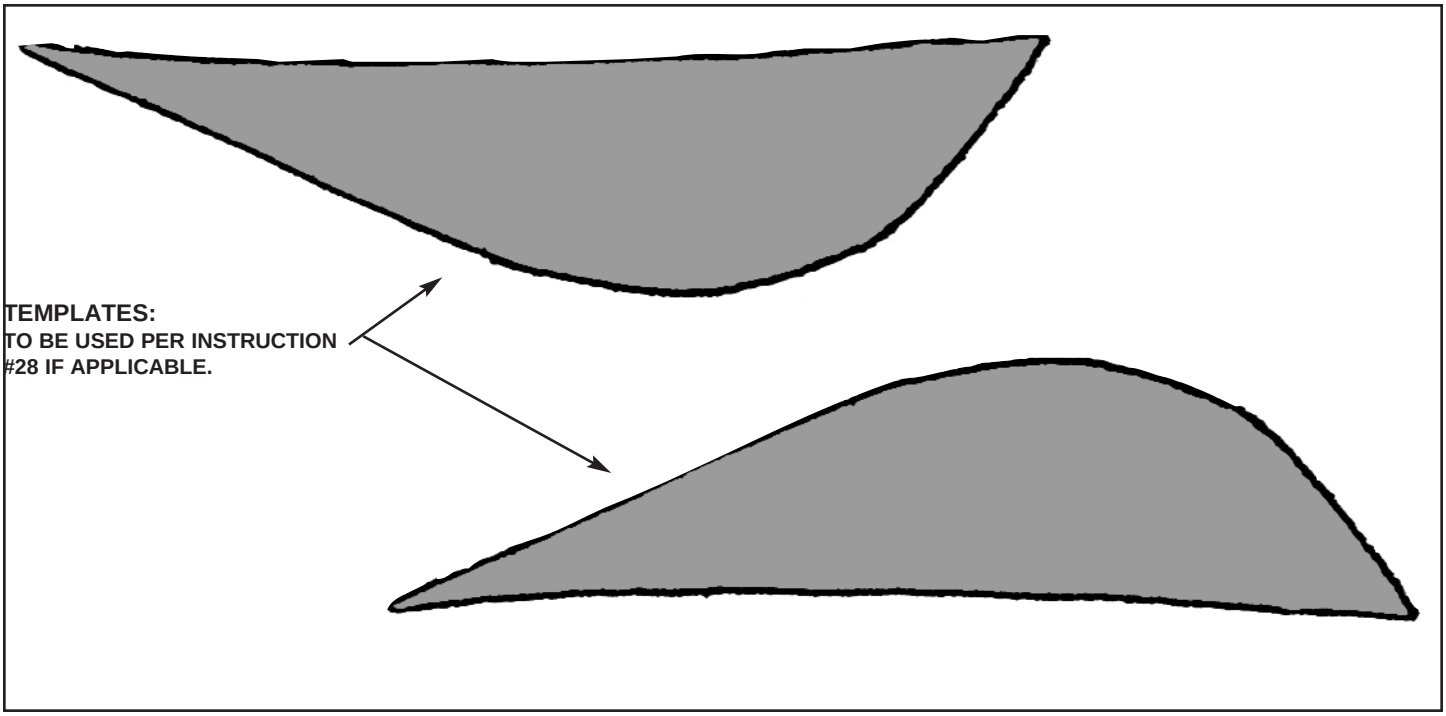
Illustration #7