99 & UP
F250/F350 SUPER DUTY
AND EXCURSION 4",6" & 8"
INSTALLATION INSTRUCTIONS

SKYJACKER®
THE BEAR OF SUSPENSIONS

Before beginning the installation, read these instructions and the enclosed driver's "WARNING NOTICE" thoroughly and completely. Also affix the "WARNING" decal in passenger compartment in clear view of all occupants. If any of these items are missing from this instruction packet, do not proceed with installation, but call SKYJACKER® to obtain needed items. If you have any questions or reservations about installing this lift kit, call SKYJACKER® at 318-388-0816 for Technical Assistance or Customer Service departments.

Make sure you park the vehicle on a level concrete or asphalt surface. Many times a vehicle is un-level (side-to-side) from the factory, but usually not noticed until a lift kit has been installed which makes the difference more visible. Using a measuring tape, measure the front and rear (both sides) from the ground up to the center of the fender opening above the axle. Record below for future reference. (**NOTE:** Due to OEM inconsistency and the available options, the amount of lift gained by this lift kit can vary as much as 1/2".

Driver Side Front: _____ Passenger Side Front: _____

Driver Side Rear: _____ Passenger Side Rear: _____

NOTE: Ford made a design change to the front track bar and pitman on models made 3/99 and after (newer). Therefore, drop pitman arm part # FA499 is required on models built 03/99 and newer. The track bar on the newer models uses 20mm mounting hardware. Do not attempt to modify new track bar relocation bracket(s) to fit these models. In the event you need the other brackets, contact place of purchase for an exchange of bracket(s).

FRONT INSTALLATION:

1. The SOFTRIDE® front springs are center pinned so the spring can be installed with either end toward the front or rear.

2. Open the hardware bag and apply a thin coat of lithium-based grease around the polyurethane bushings and insert into each eye of the new front springs then apply a thin coat on the outside of bushings. Insert one "thin wall" sleeve (will be the front eye of spring) and one "thick wall" sleeve in each spring.

3. Raise front of vehicle and support securely with jack stands under the frame behind front springs and block the rear wheels. Remove the tires, shocks, u-bolts **(Caution: once the u-bolts are removed, the front axle will be free to move, so support securely on a floor jack)**.

4. Saving all hardware, unbolt front track bar from vehicle at frame on driver side (Note: if installing 6" or 8" lift, also remove track bar from mount on the axle on the passenger side). Remove original track bar bracket from frame and crossmember (leave retainer clip inside frame rail).

5. Disconnect the tie rod assembly from the original pitman arm. Skyjacker's® new drop pitman arm is needed for 4", 6" & 8" lifts (it is ordered separately in 4" and 6" kits, but included in the 8" kit box). Remove pitman arm using a pitman arm puller, and install new drop pitman arm. Be sure to install arm in same direction as original arm (drag link hold end pointing forward).

6. Remove front sway bar end links from the sway bar (notice that they are offset to the inside at the top).

7. Unbolt each end of the original front leaf springs and remove both springs from vehicle.

8. Attach new drop track bar bracket to frame using the original bolts and retainer clip (inside frame rail). Install new 1/2" x 2½" bolt with a washer into bracket from the front, then through the crossmember using a washer and lock nut on the back (see arrow in Photo #1). **NOTE:** Some models may require slight grinding to the crossmember for bracket to pull flush against it. Tighten all track bar bracket bolts. Reattach track bar to new drop bracket using original hardware (Photo #2).

9. <u>6" & 8" Lifts Only</u>: NOTE: lower bracket for models made 3/99 and newer, looks slightly different from bracket shown in photos 3 & 4. Place new track bar mounting bracket into original trackbar mount (Photo #3). You may need to lightly tap bracket down in place. **(Rotate top of bracket toward passenger side leaf spring until rear gusset is against original trackbar mount, see arrow in photo #3)**

   Prior to 3/99 - Insert 9/16" x 3½" bolt with washer through original mounting hole and tighten locknut to hold bracket in place. Using new brackets left tab as a guide, drill ½" hole through **outer** OEM Plate **Only**. Insert ½" x 1½" bolt with washer and tighten locknut. Reattach track bar using original hardware (Photo #4). Completely tighten all hardware.

   3/99 and Newer - Insert new 20mm x 90mm bolt through original mounting hole using new 20mm locknut provided, and tighten to hold bracket in place. Using new brackets left tab as a guide, drill 9/16" hole through both the **inner and outer** OEM plates. Be sure to keep drill bit level vertically and horizontally. Insert 1" long spacer at new drilled hole, inside the original mounts. Insert 9/16" x 3" bolt with washer thru spacer and tighten locknut. Reattach track bar using original hardware (Photo #4). Completely tighten all hardware.

NOTE: Track bar brackets will only work with the Skyjacker specific application height of lift springs.

<u>DO NOT</u> combine with other manufactures lift kit components.

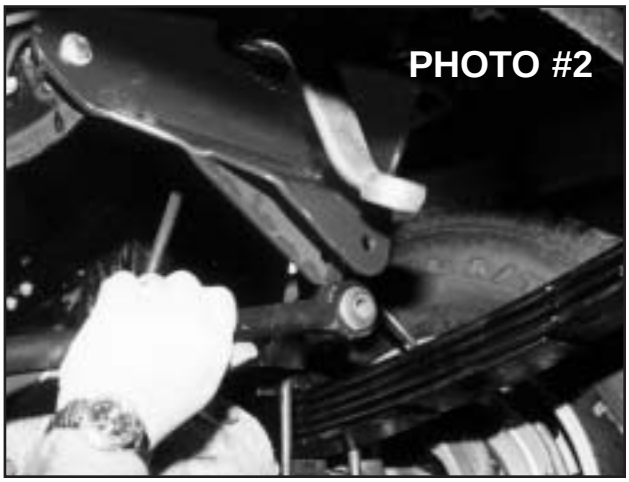

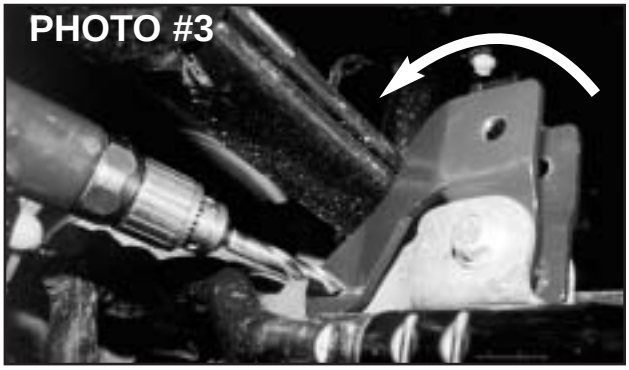

Here's A Tip: Have a friend turn the steering wheel slightly from left to right, this will aid in aligning the trackbar to the trackbar bracket hole. See arrow below.

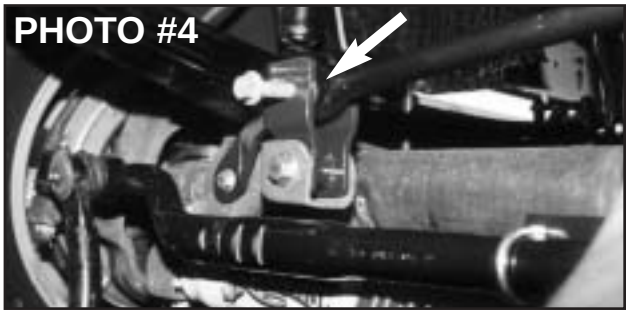

10. Install the new springs with the "thin wall" sleeves toward the front bumper. Do not fully tighten spring and shackle bolts at this time. **(NOTE: It is important to *NOT* fully tighten the spring and shackle bolts at this time on these SOFTRIDE® springs *because* with no load being applied on the springs, a false lift and stiff ride will result. These bolts will be fully tightened later once the vehicle is on the ground with the weight on the springs.) Install new front U-Bolts and torque to 85-90 ft. lbs.**

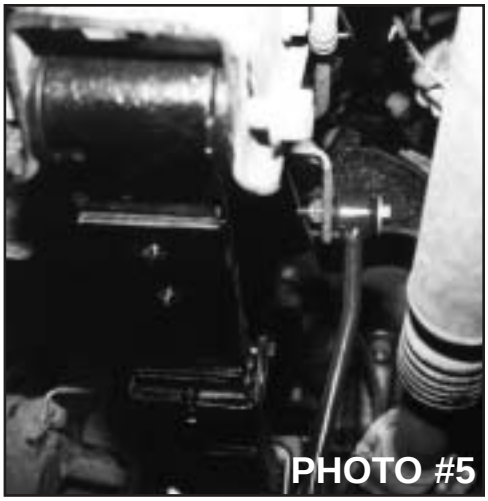
PHOTO #5

11. Reattach drag link assembly to new drop pitman arm being sure to reinstall cotter pin. On 8" kits, install the provided front brake lines using the instructions inclosed.

12. Open sway bar end link hardware bag. Insert a bushing and metal sleeve #51792 into each eye. Install the new end links beginning with the top driver's side (see photo #5, shown from the rear). Insert new 12mm bolt and large washer from the inside through end link eye then mounting tab and tighten with 12mm nut.

    Next install the top of passenger's side end link (see photo #6, shown from the rear). Insert new 12mm bolt and large washer from the outside through end link eye then mounting tab and tighten with 12mm nut.

PHOTO #6

    Now connect the sway bar to end link inserting new 1/2 x 3" bolts through mount (from outside) then through end link with a large washer and lock nut on the inside as shown in photo #7. Once both side are installed, completely tighten bolts.

PHOTO #7

13. Install new shocks at this time. If purchased Skyjacker's® triple shock kit, refer to its instructions at this time.

14. Install tires and lower vehicle to ground. **Now completely tighten the spring eye and shackle bolts on each side.**

TO INSTALL THE REAR:

15. Raise rear and support securely with jack stands and block the front wheels. Remove the tires, shocks, u-bolts and vent tube on differential. **(CAUTION: the rear axle will now be free to move, so support securely on floor jack.)**

16. New rear leaf spring installation: Unbolt and remove the stock rear springs and bolt up the new rear springs with long end of spring towards rear bumper. (NOTE: be sure thick end of bottom degree shim is also towards rear bumper.) The original blocks are maintained.(on vehicles built prior to march '99 the block is removed on 4" Systems with rear springs).

17. Rear block installation: Install the new lift blocks, taller end toward the rear bumper, between springs and original blocks (new block will be installed on top of the original block).On 8" kits, install the provided rear brake lines using the instructions enclosed.

18. Using the floor jack, raise the axle up to rear springs. Be sure the spring tie bolts and block pins all align in proper holes and are completely seated. Install and torque new u-bolts to 100-110 ft. lbs.

19. Install rear sway bar endlinks (supplied only in 8" kit or ordered optionally w/ 4" & 6" kits). Install new shocks and tires, then lower vehicle to ground.

NOTES:

- **If vehicle is equipped with rear sway bars, you need to order the following extended sway bar end links: #SBE404 for 4" lifts #SBE405 for 6" lifts**
- **According to Ford manuals there is a 3/4" tolerance on side to side height differences from factory. If you are having this problem after installation, please call for further options.**
- On models equipped with a rear carrier bearing, if a driveline vibration occurs, it may be required to lower carrier bearing after installation of this lift.
  4-6" Lifts use Skyjacker Part # CBL3401 8" Lifts use Skyjacker Part # CBL214
- Be sure to have front end alignment checked periodically by a professional for your safety and longer tire life.
- Check drive shafts for proper length and clearance. Check brake line length; it may be necessary to re-route original lines or replace with new longer stainless steel lines available from SKYJACKER®.
- It may be necessary to recenter the steering wheel by adjusting the turn buckle on the drag link assembly.

NOTICE: Retorque ALL nuts, bolts and especially the u-bolts after the first 100 miles, again after another 100 miles, and then check periodically thereafter.

Torque Specifications:

7/16" Bolts .....55 - 58 ft.lbs.
1/2" Bolts .....85 - 90 ft.lbs.
9/16" Bolts .....115 - 125 ft.lbs.
9/16" Front U-Bolts .....85 - 90 ft.lbs.
5/8" Rear U-Bolts .....100-110 ft. lbs
12mm Bolts .....73-77 ft.lbs.

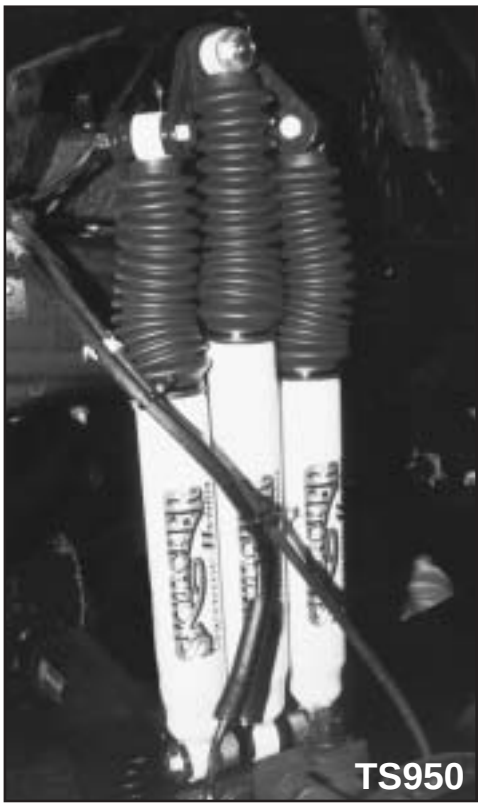

ACCESSORIES:

- **Triple Front Shock Kit (Shown at right) #TS950**
- HD OEM Replacement Steering Stabilizer #7099
- **Single Steering Stabilizer (Shown below) #7199**
- Dual Steering Stabilizer #7299

The SOFTRIDE® rear springs are also available *separately*.

PITMAN ARM
INSTALLATION INSTRUCTIONS
(Find proper application listed below)

SKYJACKER®
THE BEAR OF SUSPENSIONS

Figure 1

FA400/FA600 - fits FORD 1980-96 F150/Bronco, 83-97 Ranger/Bronco II, 90-94 Explorer, 80-98 F250/F350, and 99 F250/F350 Super Duties through 2/99. Power steering required.

FA499/FA699 - fits FORD 99 F250/F350 Super Duty from 3/99 and newer. Power steering required. See Figure 4 for proper assembly diagram.

Figure 2

JA150 - fits 76-86 CJ5 and CJ7 with manual steering.
JA250 - fits 76-86 CJ5 and CJ7 with power steering.
JA350 - fits 74-86 Cherokee Chief, Grand Wagoneer, Truck series 20,40,J10,J20 4WD with ps.
JA552 - fits 72-75 CJ with 1.5-2.5” lift and power steering.
JA550 - fits 72-75 CJ with 3-4” lift and power steering.
JA652 - fits 72-75 CJ with 1.5-2.5” lift and manual steering.
JA650 - fits 72-75 CJ with 3-4” lift and manual steering.
JA750 - fits 87-96 Wrangler YJ, and 97-up Wrangler TJ with 3-4" lift models with power steering.
JA850 - fits 87-96 Wrangler YJ, and 97-up Wrangler TJ with 3-4" lift models with manual steering.

To install the new pitman arm:

1. Remove the tie rod end from the pitman arm and lower tie rod down.
2. At the upper end of pitman arm, remove the nut and lock washer from the output shaft of the steering box.
3. With a puller, remove the old pitman arm and install the new arm, being sure to install the lock washer and nut.
4. Install the tie rod back onto lower end of the pitman arm. Be sure to install the cotter pin after tightening the nut.
5. Check and retighten nuts periodically.

Figure 1

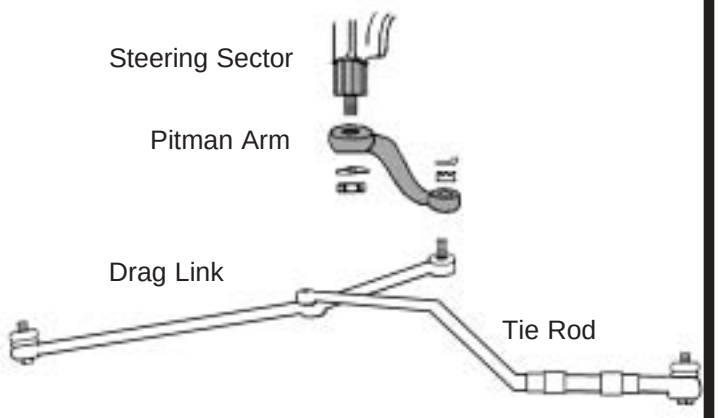

Figure 2

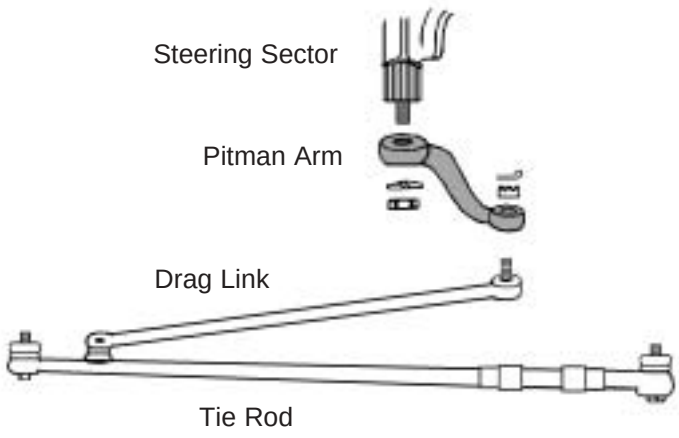

Figure 3

FA300 - fits 1976-79 Ford F100 and F150 with power steering, 78-79 Bronco with power steering, and 66-77 Bronco (with or without power steering)

NOTE: This pitman arm (FA300) is a direct factory replacement. However, on models equipped with "scissor style" steering (see **Figure 3**), found on the 1976-77 F100, F150 and old model Bronco, the drag link and tie rod assembly will require changing to the "straight style" in order to install a drop pitman arm.

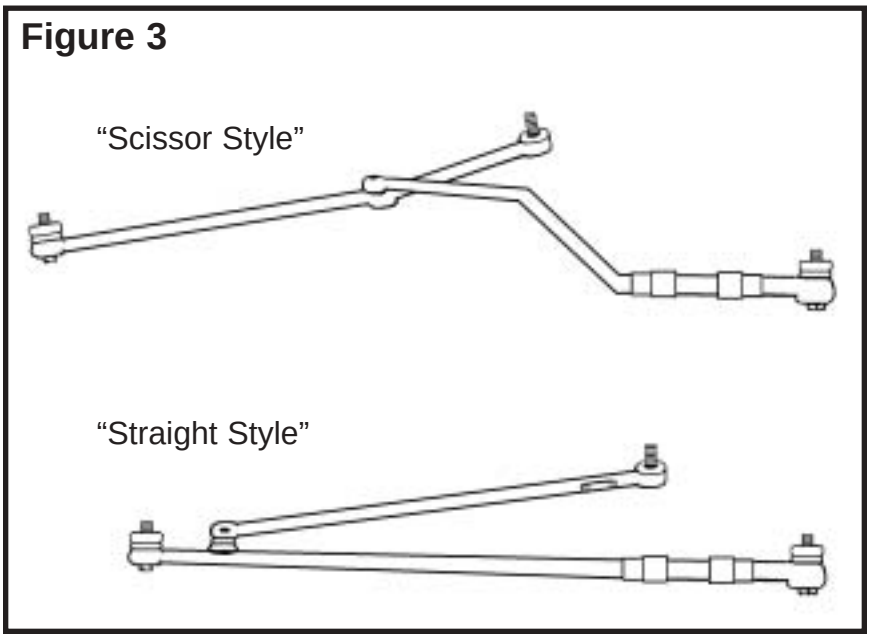

To install the new pitman arm:

1. Remove the tie rod end from the pitman arm and lower tie rod down.
2. At the upper end of pitman arm, remove the nut and lock washer from the output shaft of the steering box.
3. With a puller, remove the old pitman arm and install the new arm, being sure to install the lock washer and nut.
4. Install the tie rod back onto lower end of the pitman arm. Be sure to install the cotter pin after tightening the nut. (If you changed the style of steering rods, do not forget to reset the toe-in and toe-out and tighten all of the tie rod assembly.)
5. Check and retighten periodically.

Figure 4

SA40 - International Scout II models. (This new pitman arm is approximately 2" shorter in length than the original arm, and drops approximately 2" lower.)

To install the new pitman arm:
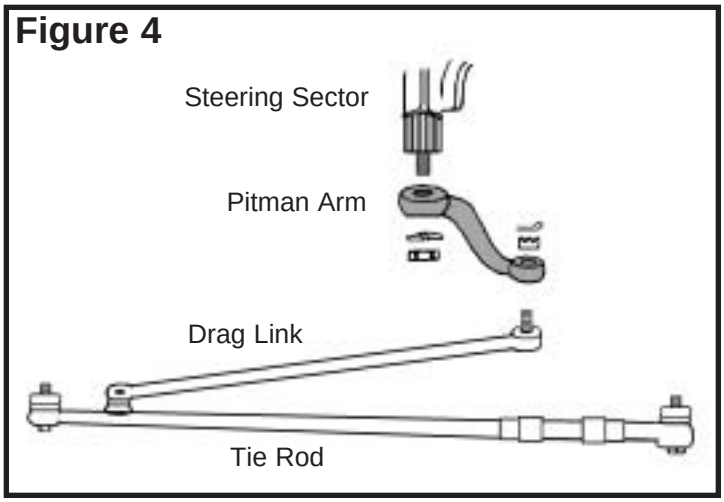
1. Remove the tie rod end from the pitman arm and lower tie rod down.
2. At the upper end of pitman arm, remove the nut and lock washer from the output shaft of the steering box.
3. With a puller, remove the old pitman arm and install the new arm, being sure to install the lock washer and nut.
4. Install the tie rod back onto lower end of the pitman arm. Be sure to install the cotter pin after tightening the nut.
5. Check and tighten nuts periodically.