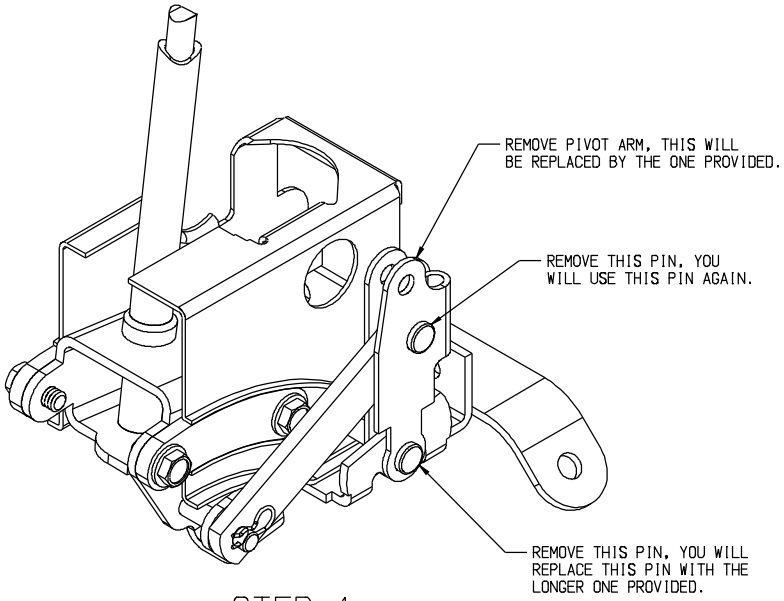

STEP 1

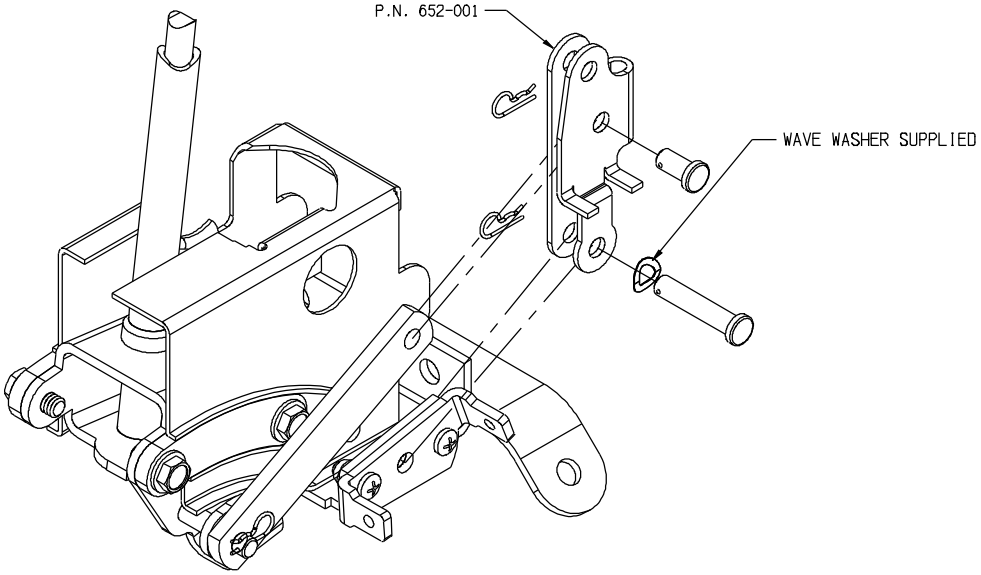

STEP 3

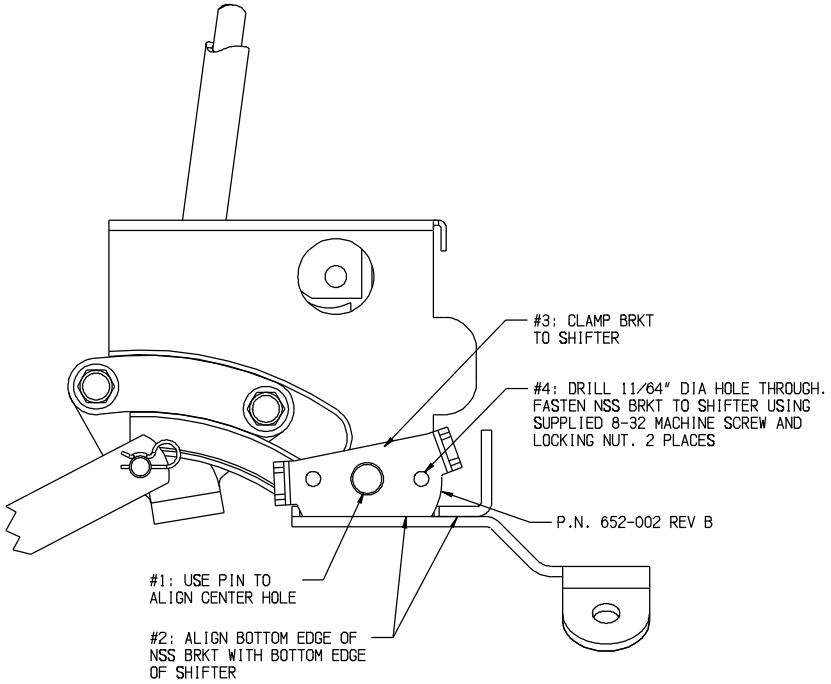

STEP 2

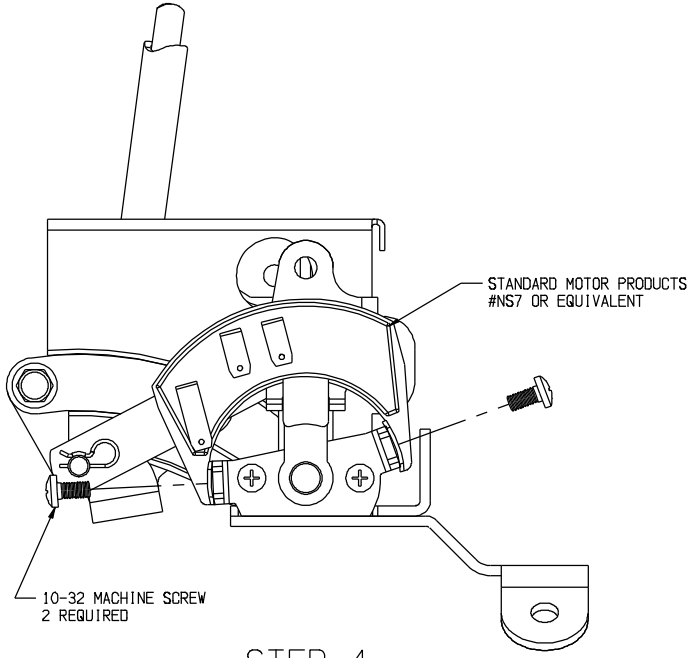

STEP 4

P.N.652 USING STOCK NSS
REVISED 02/13/2015