ONE TCI DRIVE
ASHLAND, MISSISSIPPI 38603
http://www.tciauto.com

TELEPHONE: 662-224-8972
FAX LINE: 662-224-8255
E-MAIL: tech@tciauto.com

# Trans-Scat®

## TCI® 376001 — 4L60E Transmission LT1/LS1 Equipped
## TCI® 376002 — 4L60E Transmission Non LT1/LS1 Equipped *(Includes TCI® 376003)*

**This TCI® 376001/376002 Kit Contains:**

One (1) Valve Body Gasket (Marked "V")
One (1) Case Gasket (Marked "C")
One (1) Transmission Pan Gasket
Two (2) Drill Bits (.089" and .110")
One (1) Pressure Regulator Boost Spring (green)
One (1) Small Accumulator Spring (red)
One (1) Forward Accumulator Spring (white)
One (1) Large Accumulator Spring (yellow)
One (1) Oil Filter
One (1) Heavy Duty Servo Kit (**376002** Only)

**STEP 1** Drain oil pan. You will need a pan to catch fluid. Remove transmission oil pan bolts. When removing bolts, remove so pan will not drop completely off but will be held in place with two bolts on one side to allow the fluid to be drained. After the fluid has drained, removed the rest of the bolts and pour out the remaining fluid. Remove and discard gasket. If gasket material sticks to transmission pan or case, remove all material completely. 4L60E transmissions do not have a drain plug. You may want to install a TCI® **805800** universal drain plug kit into your pan now that you have the pan off.

**STEP 2** Carefully remove the oil filter by pulling it straight down.

**STEP 3** The wiring harness must be partially disconnected from the valve body. Unplug those connectors and swing the main harness out of the way. A little care here will minimize breakage of the connectors.

Remove transmission valve body, 1-2 and 3-4 accumulator housing and spacer plate (held down with support plate). **NOTE**: Be sure to note check ball locations. If valve body is brought straight down, the seven - (7) check balls should stay in valve body. However, some may stick to the plate. See **FIGURE 1** for the seven locations. There is another checkball that is in case. It will fall out when valve body is removed. See **FIGURE 7**. Transmission gel or petroleum jelly will hold it into case during reassembly.

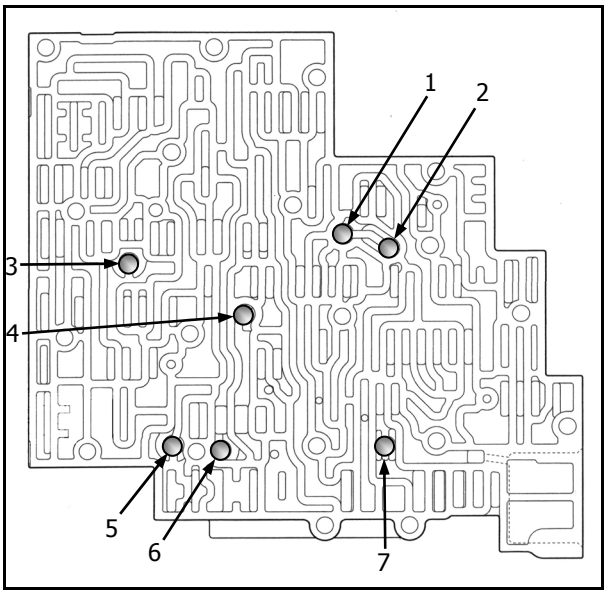


**Figure 1** - Checkball Locations

**STEP 4** Remove the pressure regulator assembly from the transmission pump. (See **FIGURE 8**, where the dotted circle indicates.) Push up on the TV boost valve sleeve when removing the retaining ring. Be careful, as there is heavy spring tension behind it. Slowly lower the sleeve to relieve spring tension. Replace the small OD spring with the green spring supplied. The small green spring goes inside the larger spring. Reinstall in pump (See **FIGURE 3**). **Note**: The pressure regulator valve may come out during disassembly. If so, coat with transmission gel or petroleum jelly and put back up inside pump GENTLY. Do not force. BE SURE to reinstall parts in correct order. Also, be sure that the retaining ring is fully seated.

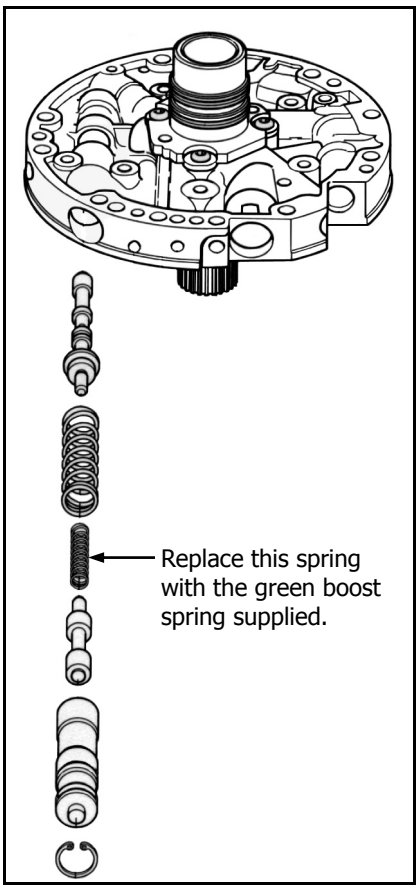


**FIGURE 3**

**STEP 5** Drill orifice sizes in spacer plate (See **FIGURE 4** template). Drill bits are supplied with kit.

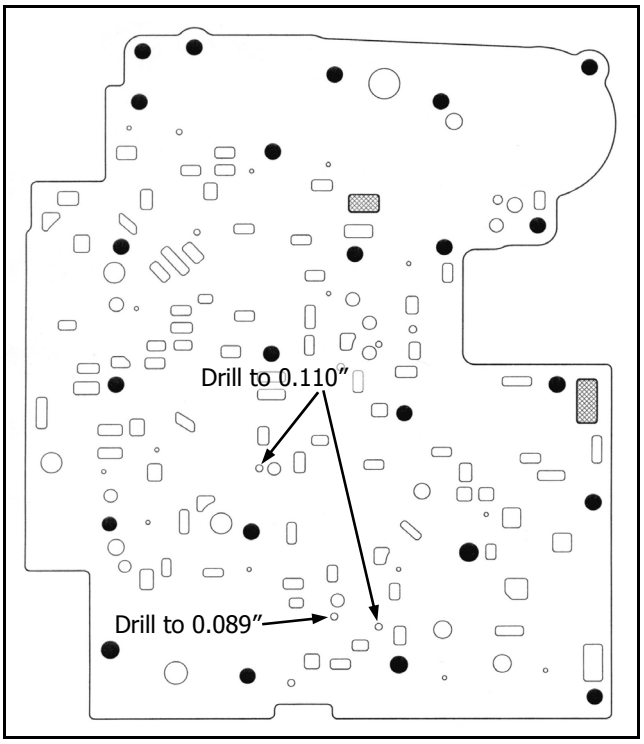


**Figure 4**

**STEP 6** Remove the accumulator valve lineup from valve body (See **FIGURE 5**).

**STEP 7** Remove small accumulator valve spring and replace with red spring provided in kit. Reinstall the accumulator valve lineup in valve body.

**STEP 8** Remove the forward accumulator cover from the valve body. (See **FIGURE 5** for location of forward accumulator cover and spring location.) Replace forward accumulator spring with white spring supplied in kit. Reassemble forward accumulator lineup and reinstall cover. Tighten bolts to 8 ft.-lbs.

**STEP 9** Remove 1-2 accumulator piston and spring from the accumulator housing. (See **FIGURE 6**) Depending on your transmission’s year model, you’ll have either the ‘Early’ arrangement or the ‘Late’ arrangement with two springs. Regardless of the type that you have, replace large accumulator spring with yellow spring supplied in kit and reassemble the accumulator with the sequence shown for the ‘Early’ arrangement.

If your transmission is equipped with a 3-4 accumulator spring in the case remove it and do not reuse. (It is likely this spring fell out when the accumulator housing and spacer plate were removed. DO NOT reinstall this spring.) Be sure 3-4 accumulator piston is installed before reinstalling spacer plate.

**STEP 10** Making sure that the check ball is in its proper location per **FIGURE 7**, reinstall spacer plate with gaskets supplied and accumulator housing. Three (3) ¾" long bolts hold the support plate in place. Use a short bolt (for alignment purposes only) at opposite end of spacer plate while tightening down retainer plate, then remove the short bolt before proceeding. Tighten the accumulator housing & support plate bolts to 8 ft.-lbs.

**STEP 11** Reinstall valve body (See **FIGURE 8** for shift link reference.) Make sure the check balls are in the seven (7) proper locations. There are six (6) different lengths of bolts for valve body hold down. The quantities, length, mm socket size, and reference letter are shown below. **FIGURE 9** indicates the location of each size. Tighten these bolts to 8 ft.-lbs.

**A**: Two (2) 1/2" - 10mm

**B**: Seven (7) 3/4" - 8mm (3 on support plate)

**C**: Four (4) 1-3/8" - 10mm

**D**: Nine (9) 1-7/8" - 10mm

**E**: Three (3) 2-1/8" - 8mm

**F**: Four (4) 2-1/2" - 10mm

**STEP 12** Install new oil filter supplied in kit.

**STEP 13** Reinstall oil pan with new gasket supplied. Tighten the pan bolts to 10 ft.-lbs.

**STEP 14** If this is a non-LT1/LS1 4L60E TCI® **376002** kit, refer to instructions for TCI® **376003** and install heavy duty servo.

**STEP 15** Fill with five (5) quarts of transmission fluid before starting engine. After running through shift pattern several times while remaining stationary, completely fill the transmission per manufacturer’s specifications.

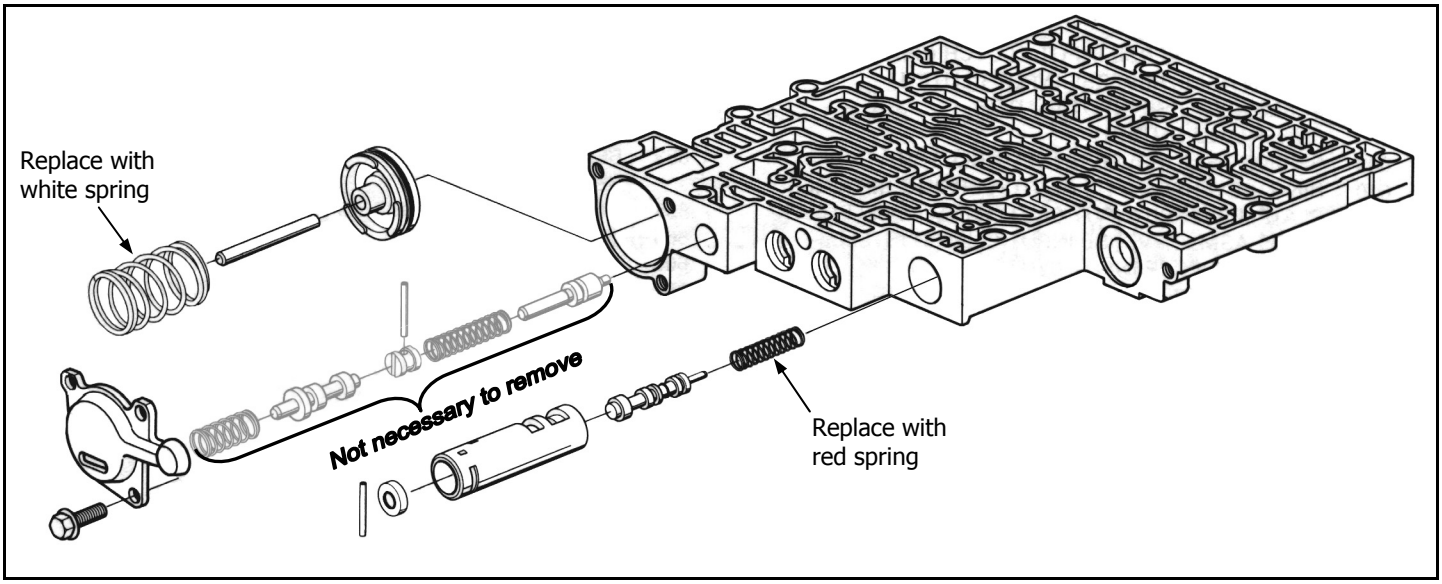


**Figure 5**

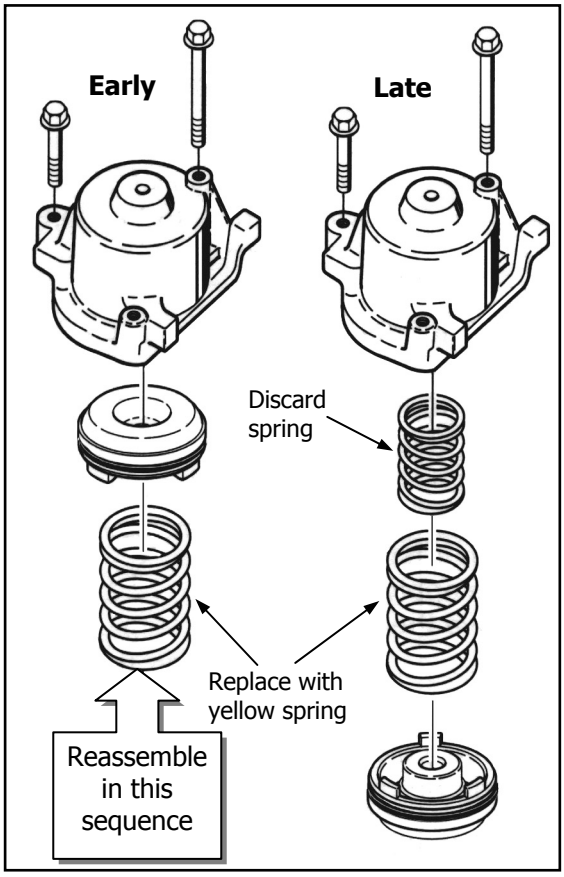


**Figure 6**

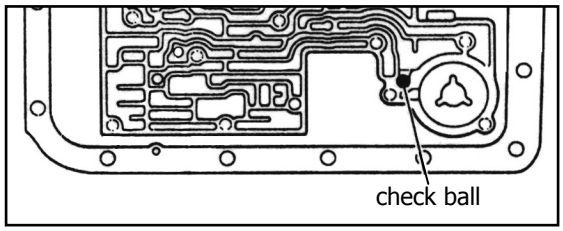


**Figure 7**

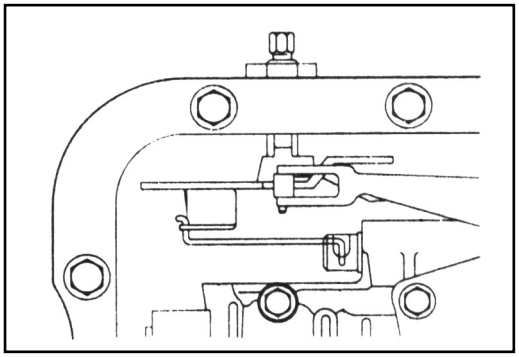

**Figure 8**

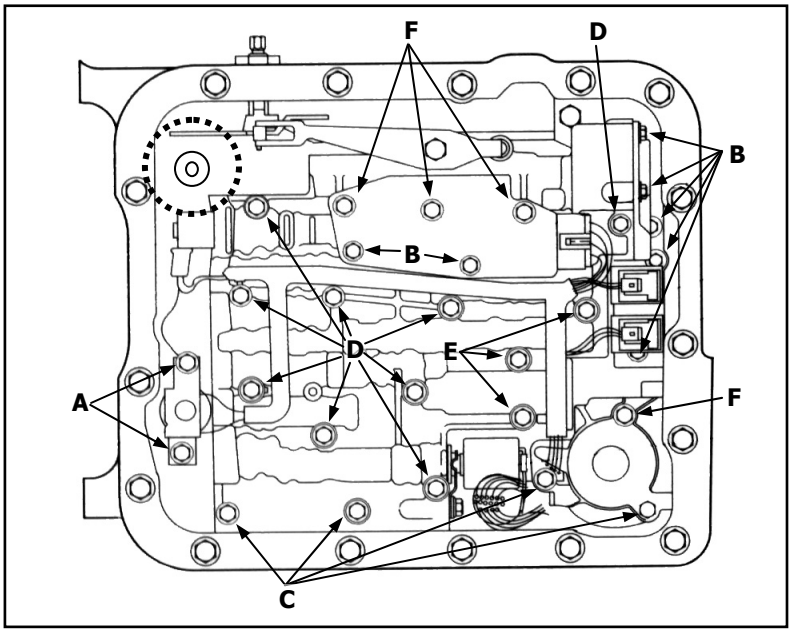


**Figure 9**

# Additional 4L60E Products From TCI®

## *4L60E 0.490" Boost Valve – Part # 374420*

Operating line pressure is the lifeblood of any automatic transmission by providing the clamping force on the clutches and bands. Oftentimes, increasing line pressure is a requirement when increasing driveline output. TCI®'s new 4L60E boost valve assembly provides you the means of elevating your line pressure while also addressing wear issues that may actually have your transmission running at a lower level of pressure than GM intended!

**Features:**

- Larger valve diameter over stock which yields 10-15% higher line pressure
- O-rings on boost sleeve which prevent loss of boost signal pressure
- Sleeve constructed from Alcoa Deltalloy 4032 & valve is hard-coat anodized which prevents wear between the mating parts

## *700R4/4L60E/4L65E Jumbo Servo Kits*

TCI's newest addition to our extensive line of high performance components, these two servo kits will enhance shift quality and extend durability of any 700R44L60E/4L65E. Since the servo applies the 2-4 band in 2nd gear, releases it in 3rd and reapplies it in 4th, the servo plays a vital role in the operation of your transmission.

TCI® **376005** kit (left) includes two CNC-machined, 6061-T6 billet aluminum pistons, seals and hardware necessary to give your servo 35% more 2nd gear apply area than the commonly used, stock Corvette-style servo. The **376006** kit (right) contains a large diameter 4th apply piston and matching cover, also machined from 6061-T6 billet aluminum. The piston utilizes a lip seal to improve fluid retention and the increased surface area will assure that the band is held tight under the most severe conditions.

Easy to install with transmission in the vehicle. Kits may be used individually or combined to create the ultimate servo for your 700R4/4L60E/4L65E transmission.

| Description | Part No. |
|---|---|
| 700R4/4L60E/4L65E 2nd Gear Jumbo Servo Kit | **376005** |
| 700R4/4L60E/4L65E 4th Gear Jumbo Servo Kit | **376006** |
| Replacement Seals for Jumbo Servo Kit | **376007** |

**Visit www.tciauto.com for more high quality drivetrain components!**

## *Cast Aluminum Deep Pans – Part # 378000*

One of the best investments you can make to assure longevity of your automatic transmission is a TCI® cast aluminum deep pan. Designed with cooling fins to dissipate heat faster, these pans also provide additional strength and rigidity to the transmission case. No modifications are necessary to the stock dipstick and the pan includes magnetic drain plug, pan gasket and new stainless-steel rail bolts and washers.