# 39 Series
# part # 39300
## weighs 13.0 lbs
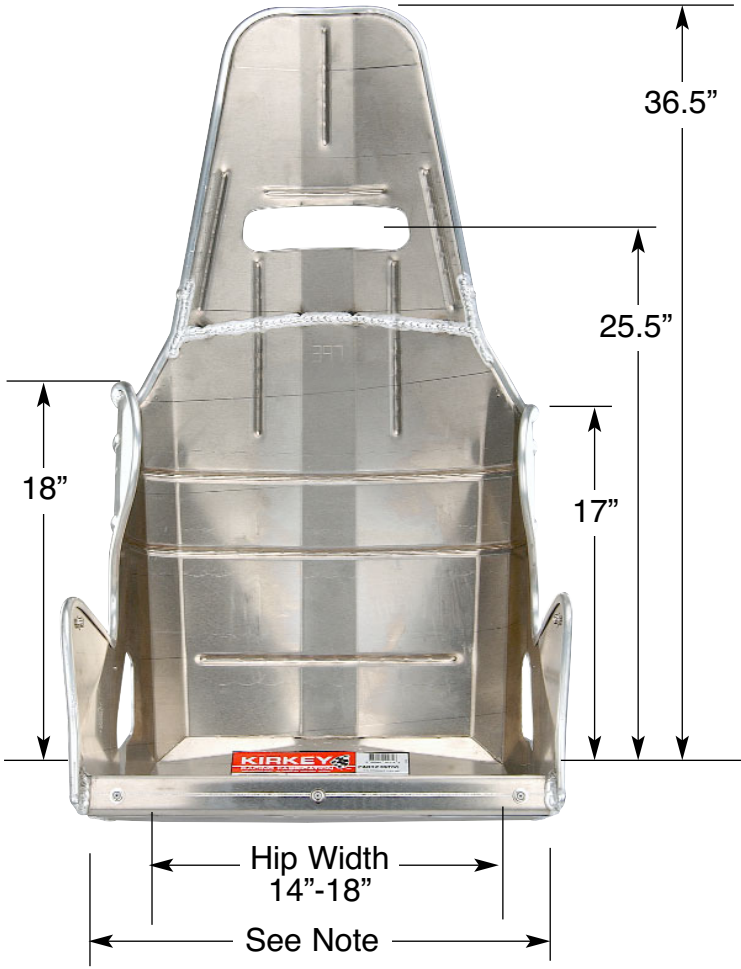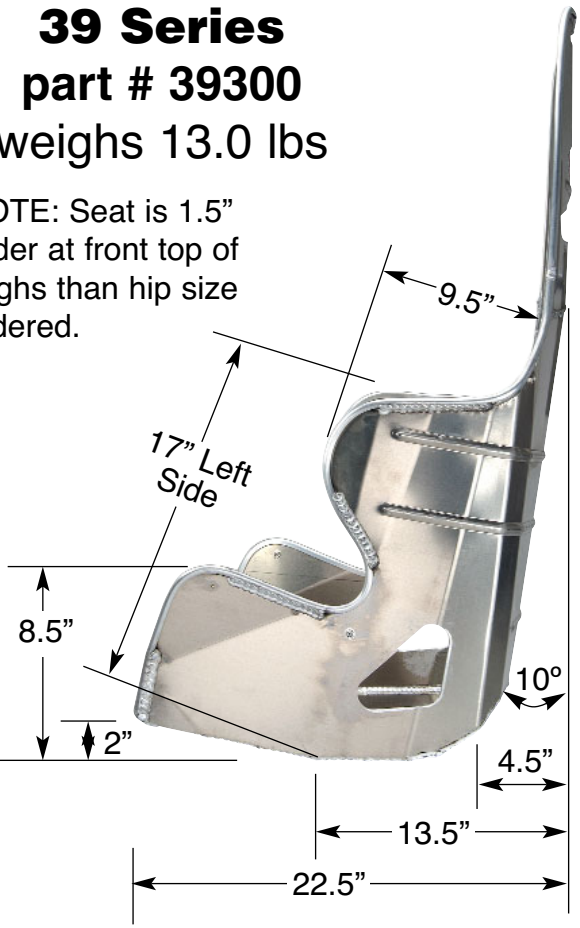
NOTE: Seat is 1.5” wider at front top of thighs than hip size ordered.