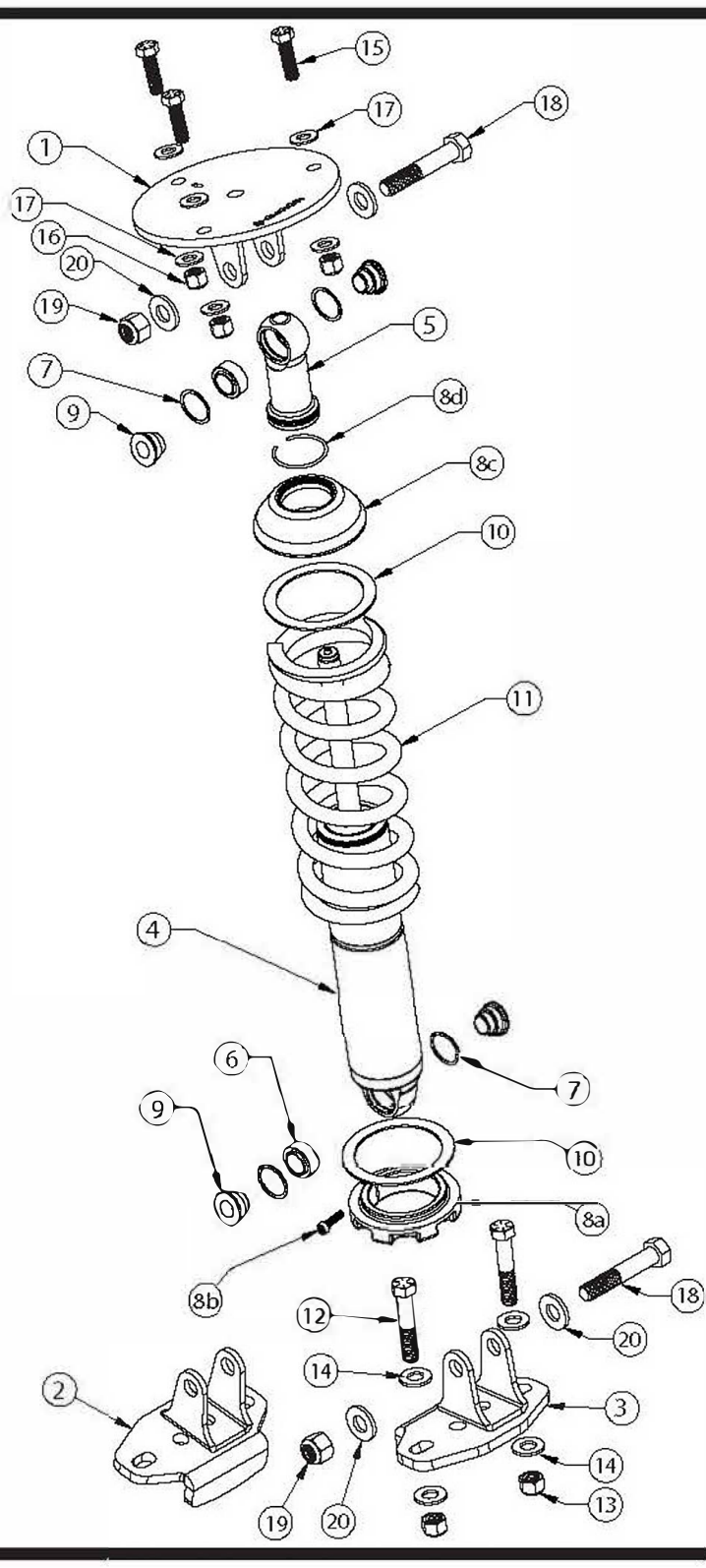

Item #	Part #	Description	QTY
1	90003435	Upper CoilOver Mount Assembly	2
2	90003436	Lower CoilOver Mount Assembly - Driver	1
3	90003437	Lower CoilOver Mount Assembly - Passenger	1
4	982-10-805	5.2" Stroke HQ Series Shock	2
5	90002025	1.7" Shock Eyelet Assembly	2
6	90001994	5/8" ID Bearing (installed in shock eyelet/body)	4
7	90001995	Bearing Snap Ring (installed in shock eyelet/body)	8
8a	90001447(kit)	Lower Spring Adjuster Nut - 234-15-200	2
8b	90001447(kit)	Adjuster Nut Locking Screw - 99050001	2
8c	90001447(kit)	Upper CoilSpring Retaining Plate - 90002070	2
8d	90001447(kit)	CoilSpring Plate Retaining Ring - 038-01-006-A	2
9	90002043	.500" x .365" Shock Bearing Spacers	8
10	70010828	Delrin Spring Washer	4
11	59120550 (2WD)	Coilspring 12" (2WD) 550lb - 2WD	2

HARDWARE LIST Kit # 99010214

Item #	Part Number	Description	QTY
	LOWER MOUNT		
12	99431033	7/16"-14 x 2 1/4" Hex Bolt	4
13	99432010	7/16"-14 Nylok Nut	4
14	99433005	7/16" SAE Flat Washer	8
	UPPER MOUNT		
15	99371005	3/8"-16 x 1 1/4" Hex Bolt	6
16	99372001	3/8"-16 Nylok Nut	6
17	99373002	3/8" SAE Flat Washer	12
	SHOCK TO SHOCK MOUNTS		
18	99501064	1/2"-13 x 2 3/4" Hex Bolt	4
19	99502009	1/2"-13 Nylok Nut	4
20	99503014	1/2" SAE Flat Washer	8