ridetech
Air Ride Technologies

Installation Instructions

Part # 11500311 - 2010 Up Camaro Level 3 CoilOver System

Front Components:
11303111 Front CoilOver Strut Instructions

Rear Components:
11506111 Rear Coilover Instructions

Miscellaneous Components:
85000000 Spanner Wrench

Recommended Tools

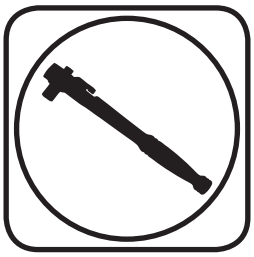

2010 up Camaro Level 2 Coilover
Installation Instructions

Table of contents

Pages 2-10..... Front CoilOvers
Pages 11-17..... Rear CoilOvers

www.ridetech.com
812-482-2932

ridetech
Air Ride Technologies

Installation Instructions

Part # 11503111 -2010 up Camaro

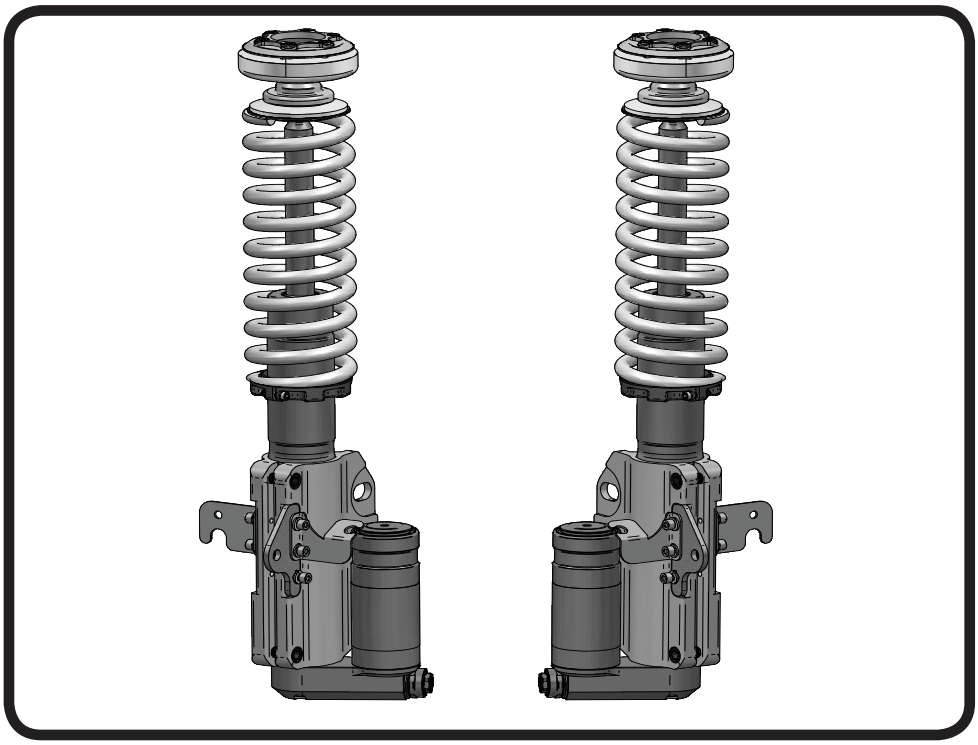

Recommended Tools

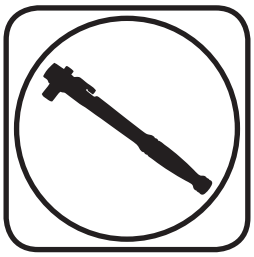

2010-up Camaro TQ Front CoilOver Strut

Installation Instructions

Table of contents

Page 3..... Included components
Page 4..... Disassembly and Getting Started
Page 5..... CoilSpring Assembly and Bearing Option
Page 6..... Bearing & Rubber Upper Mount Assembly
Page 7..... Assembly
Page 8..... Final Assembly
Page 9..... Strut Adjustment
Page 10..... Spring Preload and Adjustment

www.ridetech.com
812-482-2932

ridetech
Air Ride Technologies

Installation Instructions

Included Components .....In the box

Item #	Part #	Description	QTY
1	27669999	Strut Cartridge	2
2	90002364	Rubber Retaining Plate	2
3	90002363	Upper Retention Plate	2
4	70010941	Strut Extrusion	2
5	90002366	Thrust Bearing Adapter	2
6	70010987	Thrust Bearing	2
7	70010988	Thrust Bearing Washer	4
8	90001973	Lower Rubber Bushing	2
9	99562003	9/16" Nylok Jam Nut	2
10	99251007	1/4"-20 x 1/4" SHCS	6
11	99251010	1/4"-20 x 1" SHCS	6
12	70010992	Strut Retaining Ring	2
13	70010828	Delrin CoilSpring Washer	4
14	90002365	CoilSpring to Bearing Adapter	2
15	70010991	ABS Line Tab	2
16	70010990	Driver Brake Line Tab	1
16	70011386	Pass Brake Line Tab	1
17	70010975	Sway Bar Link Mount	2
18	99371042	3/8"-16 x 1" SHCS	4
19	99251008	1/4"-20 x 1/2" SHCS	4
20	99251009	1/4"-20 x 3/4" SHCS	6
21	70010949	Rubber Upper Mount	2
22	99683001	Upper Washer	2
23	99253007	1/4" Split Lock Washer	10
24	59100275	10" 275lb CoilSpring	2
25	90002222kit	CoilSpring Cap Retaining Ring	2
26	90002222kit	CoilSpring Cap	2
27	90002222kit	CoilSpring Adjuster Nut	2
28	90002222kit	Adjuster Nut Locking Screw	2
	90002376	Posilink Spacer (Not Shown)	2
	90000926	10mm 90 Degree PosiLink	4
	99112001	10-1.5mm Jam Nut	4
	99112002	10-1.5mm Nylok Nut	4

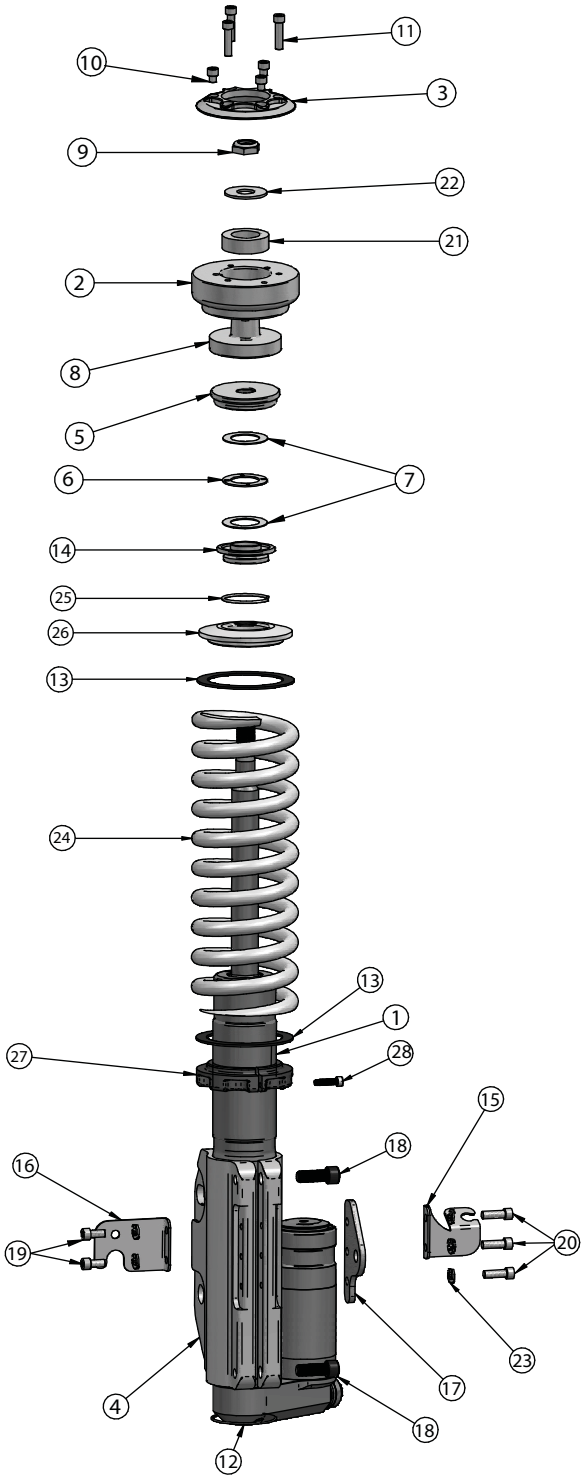

ridetech
Air Ride Technologies

Installation Instructions

Disassembly

1. Remove the front struts by first disconnecting the ABS wire and brake line(retain hardware) from the factory strut.

2. Disconnect the swaybar linkage from the strut.

3. Support the front hub and control arm assembly and remove the (2) struts bolts(retain hardware) that attach the strut to the spindle.

4. Remove the cap from the top strut nut in the engine compartment, then remove the nut and strut retainer. **DO NOT REMOVE THE SECOND NUT**.

5. Remove strut assembly from the car.

Getting Started (IF USING BEARING UPPER MOUNT SKIP TO STEP 9)

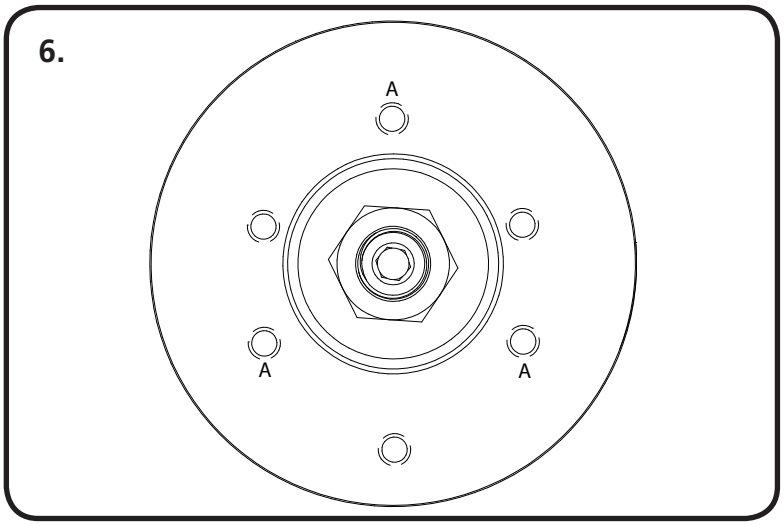

IF USING BEARING UPPER MOUNT SKIP TO STEP 9

6. The upper strut mount provided in this kit has 6 bolt holes. Looking at the illustration you will notice "A" bolt holes are centered. Position "A" is used for this installation. Camber adjustment is done at the strut lower mount.

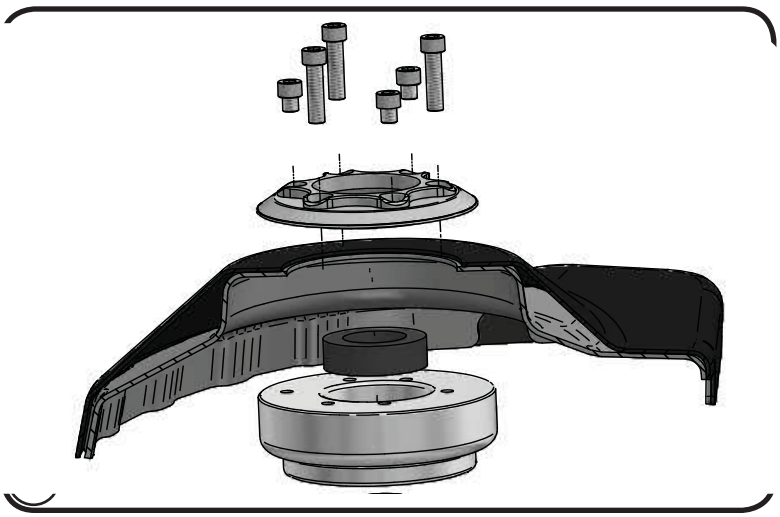

7. Bolt the upper mount into the car positioning it centered in the opening using the bolt pattern location described in the previous step. The upper plate has a ledge to help position the mount in the opening. The upper plate has (6) holes. (3) are threaded and (3) are thru drilled. The long bolts go thru the upper mount to attach it to the lower mount. The short bolts thread into the threaded holes. Tighten all (6) down.

www.ridetech.com
812-482-2932

CoilSpring Installation

8.

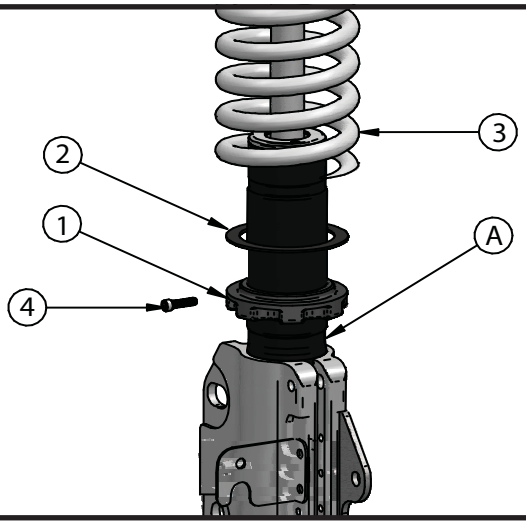

8. Install the Coilspring on to the Strut (A) according to Diagram #8.

1. CoilSpring Adjuster Nut: thread to bottom of threads for ease of installation of the Strut Assemble.
2. Delrin Washer
3. CoilSpring
4. CoilSpring Adjuster Nut Locking Screw: leave screw loose until final adjustment is completed.

Bearing Option

9.

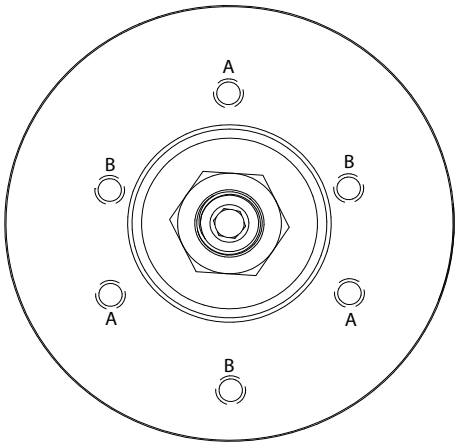

9. The upper strut mount provided in this kit has 2 mounting positions. Centered and offset. Looking at the illustration you will notice "A" bolt holes are centered and "B" bolt holes are offset. Position "A" is used for a street driving alignment. Position "B" is used when a more aggressive alignment is desired. This adjustable upper mount along with the adjustment on the lower Strut mount provide more adjustment than the stock setup. Position "B" will offset the top of the Strut towards the engine.

10.

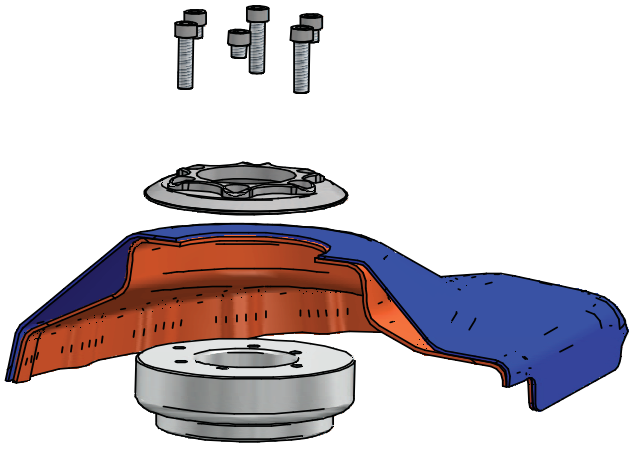

10. Bolt the upper mount into the car positioning it for the alignment desired using the description in the previous step. The mount will be either centered or the center strut mount offset towards the engine. The upper plate has (6) holes. (3) are threaded and (3) are thru drilled. The long bolts go thru the upper mount to attach it to the lower mount. The short bolts thread into the threaded holes. Tighten all (6) down.

ridetech
Air Ride Technologies

Installation Instructions

Bearing Upper Mount Assembly

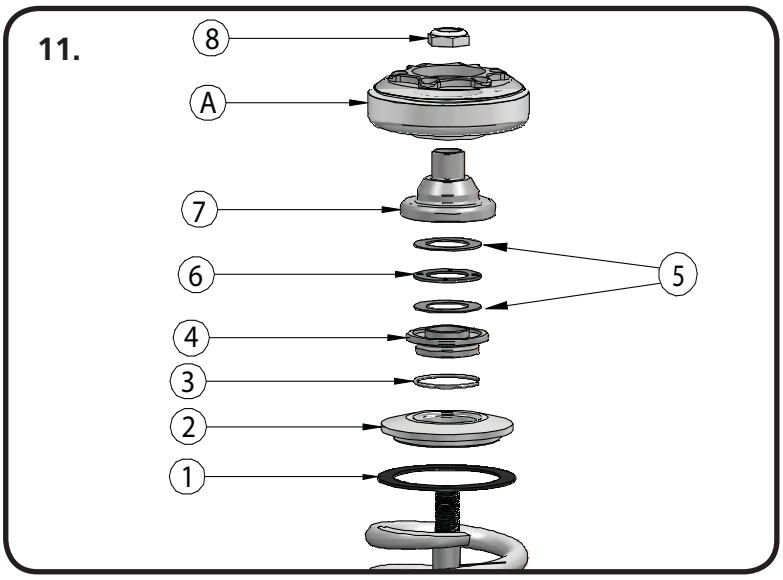

11. Remove the Adjuster Knob from the Strut shaft for assembly. With the CoilSpring installed on the Strut, bolt the strut assembly into the upper mount (A), see diagram 11 for assembly order.

1. Delrin CoilSpring Washer
2. Upper CoilSpring Cap
3. CoilSpring Cap Retaining Ring (Installed On #4 CoilSpring to Bearing Adapter)
4. CoilSpring to Bearing Adapter
5. Torrington Bearing Races
6. Torrington Bearing
7. Torrington to Upper Mount Adapter
8. 9/16" Locknut

Assemble components and install into upper mount tightening upper nut. Reinstall upper adjustment knob.

Rubber Upper Mount Assembly

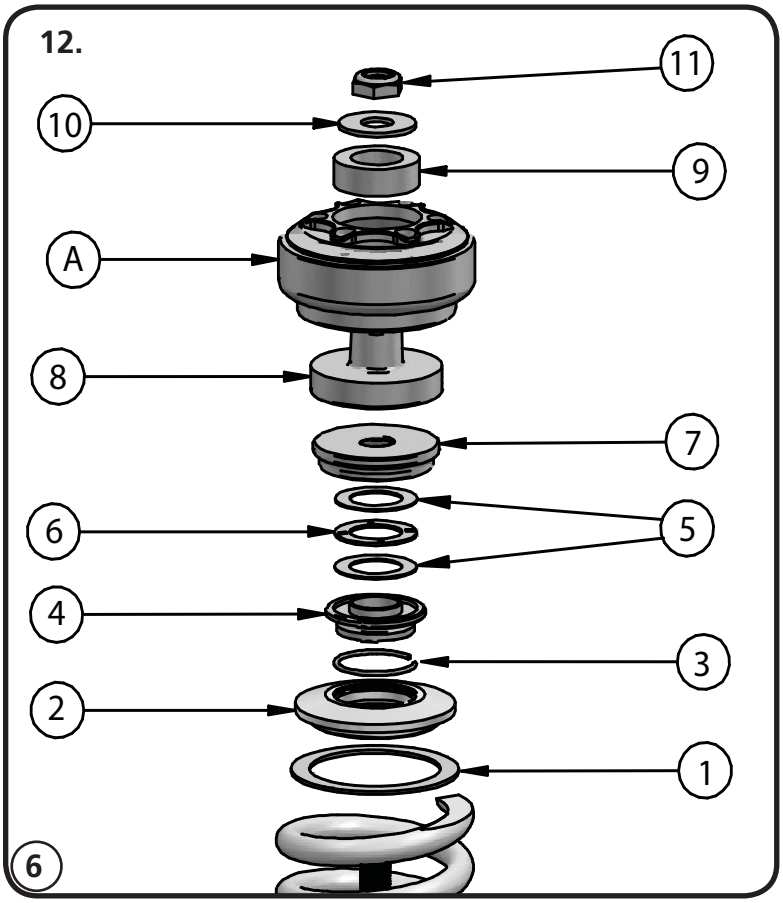

12. Remove the Adjuster Knob from the Strut shaft for assembly. With the CoilSpring installed on the Strut, bolt the strut assembly into the upper mount (A), see diagram 11 for assembly order.

1. Delrin CoilSpring Washer
2. Upper CoilSpring Cap
3. CoilSpring Cap Retaining Ring (Installed On #4 CoilSpring to Bearing Adapter)
4. CoilSpring to Bearing Adapter
5. Torrington Bearing Races
6. Torrington Bearing
7. Bearing Adapter (Flat Side Up)
8. Lower Rubber Isolator (T Shaped)
9. Upper Rubber Isolator
10. Washer
11. 9/16" Locknut

Assemble components and install into upper mount tightening upper nut. Reinstall upper adjustment knob.

www.ridetech.com
812-482-2932

Assembly

13.

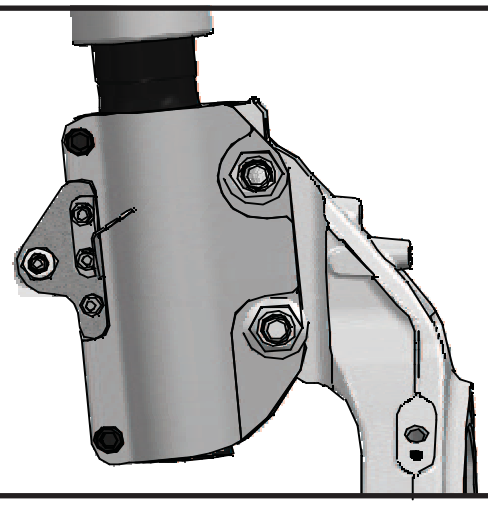

13. Attach the PosiLinks between the strut and Sway bar using the 10mm Nylok Nut. Refer to diagram 13 for orientation.

NOTE: There is a Drivers and Passenger Posilink assembly, refer to diagrams (13 and 14) for proper installation

14.

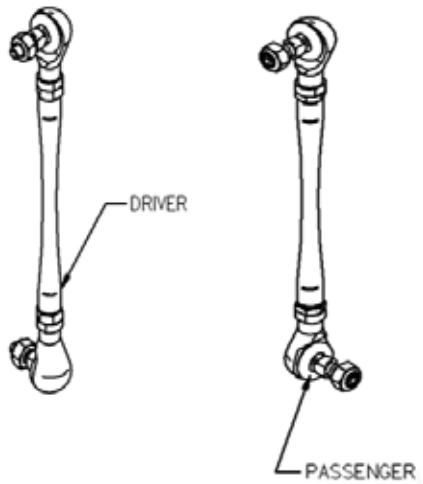

14. The Posilink mounts with the stud on the Strut pointing forward, and the stud on the Sway bar pointing in.

***NOTE:* Some vehicles have a 10mm sway bar linkage, some have 12mm linkage. the Posilink linkage provided in the kit has 10mm studs, T-bushings are provided in the kit for 12mm linkage setups. Install a T-bushing in each side of the swaybar hole , then install the Posilink in it and tighten.**

Note: Image is viewing from front of vehicle.

15.

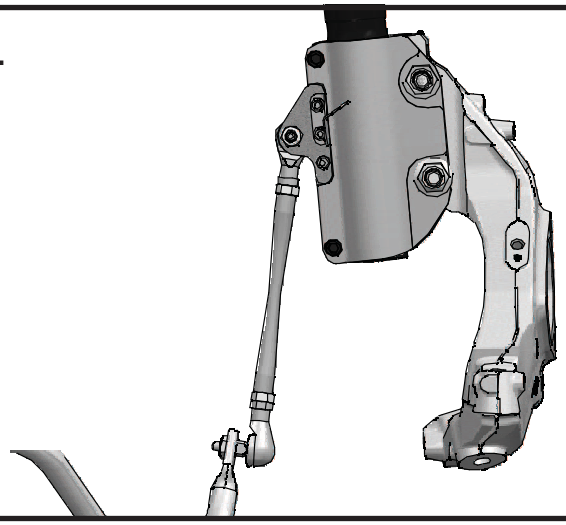

15. Attach the brake line to the mount on the Strut using the Factory hardware.

Final Assembly

16. Attach the brake line to the mount on the Strut using the Factory hardware.

17. Slide the ABS wire into its mount on the Strut.

18. Thread the Adjuster nut up until it is snug against the bottom of the CoilSpring. This is Zero Preload. After nut is snug lightly tighten the locking screw.

19. Repeat previous steps on Passenger side.

20. With Both sides installed, slowly lower the car to the ground to check ride height. It may be necessary to tighten the Adjusting nut (Also known as preloading the CoilSpring) to achieve proper ride height. To do this you will need to loosen the Adjuster Nut Locking Screw and tighten the Adjuster Nut to put PreLoad into the CoilSpring. Once the correct ride height is achieved tighten the Locking Screw in the lower Adjuster nut. **It may be helpful to read the section pertaining to spring preload and adjustment on Page 9.**

Strut Adjustment

Strut Adjustment 101- **Single Adjustable**

Rebound Adjustment:
How to adjust your new struts.
The rebound adjustment knob is located on the top of the Strut protruding through the upper mount.
You must first begin at the ZERO setting, then set the shock to a soft setting of 20.

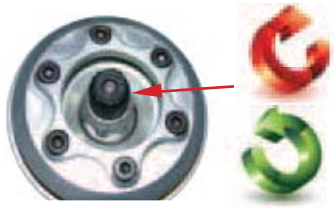

-Begin with the Strut adjusted to the ZERO rebound position (full stiff). Do this by rotating the rebound adjuster knob clockwise until it stops.

-Now turn the rebound adjuster knob counter clock wise 20 clicks. This sets the shock at 20. (settings 21-24 are typically too soft for street use).

Take the vehicle for a test drive.

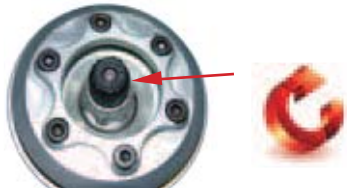

-If you are satisfied with the ride quality, do not do anything, you are set!

-If the ride quality is too soft increase the damping effect by rotating the rebound knob clock wise 3 clicks.

Take the vehicle for another test drive.

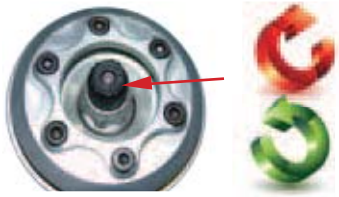

-If the vehicle is too soft increase the damping effect by rotating the rebound knob clock wise 3 additional clicks.

-If the vehicle is too stiff rotate the rebound adjustment knob counter clock wise 2 clicks and you are set!

Take the vehicle for another test drive and repeat the above steps until the ride quality is satisfactory.

Note:
One end of the vehicle will likely reach the desired setting before the other end. If this happens stop adjusting the satisfied end and keep adjusting the unsatisfied end until the overall ride quality is satisfactory.

Strut Adjustment

Shock adjustment 101- **Triple Adjustable**

Triple Adjustable:
Step One: High Speed Compression

-High speed compression adjustments are used in both street driving and track tuning.

-Begin with the shocks adjusted to the ZERO high speed compression position (full stiff). Do this by rotating the high speed compression adjuster (large knob) clockwise until it stops.

-Now turn the high speed compression adjuster knob counter clock wise 20 clicks. This sets the shock at 20. (settings 21-24 are typically too soft for street use. For typical street driving the high speed compression adjuster will remain at setting 20.

Step Two: Low Speed Compression
Low speed compression adjustment is what is typically felt during street driving.

-Begin with the shocks adjusted to the ZERO low speed compression position (full stiff). Do this by rotating the low speed compression adjuster (small knob) clockwise until it stops.
-Now turn the low speed compression adjuster knob counter clock wise 20 clicks. This sets the shock at 20. (settings 21-24 are typically too soft for street use).
Take the vehicle for a test drive.

-if you are satisfied with the ride quality, do not do anything, you are set!

-if the ride quality is too soft increase the damping effect by rotating the low speed compression knob clock wise 3 clicks.

Take the vehicle for another test drive.

-if the vehicle is too soft increase the damping effect by rotating the low speed compression knob clock wise 3 additional clicks.

-If the vehicle is too stiff rotate the low speed compression adjustment knob counter clock wise 2 clicks and you are set!

Take the vehicle for another test drive and repeat the above steps until the ride quality is satisfactory.

Step 3:
Adjust rebound according to Single Adjustable instructions.

Note:
One end of the vehicle will likely reach the desired setting before the other end. If this happens stop adjusting the satisfied end and keep adjusting the unsatisfied end until the overall ride quality is satisfactory.

ridetech
Air Ride Technologies

Installation Instructions

Part # 11506111 -2010 up Camaro

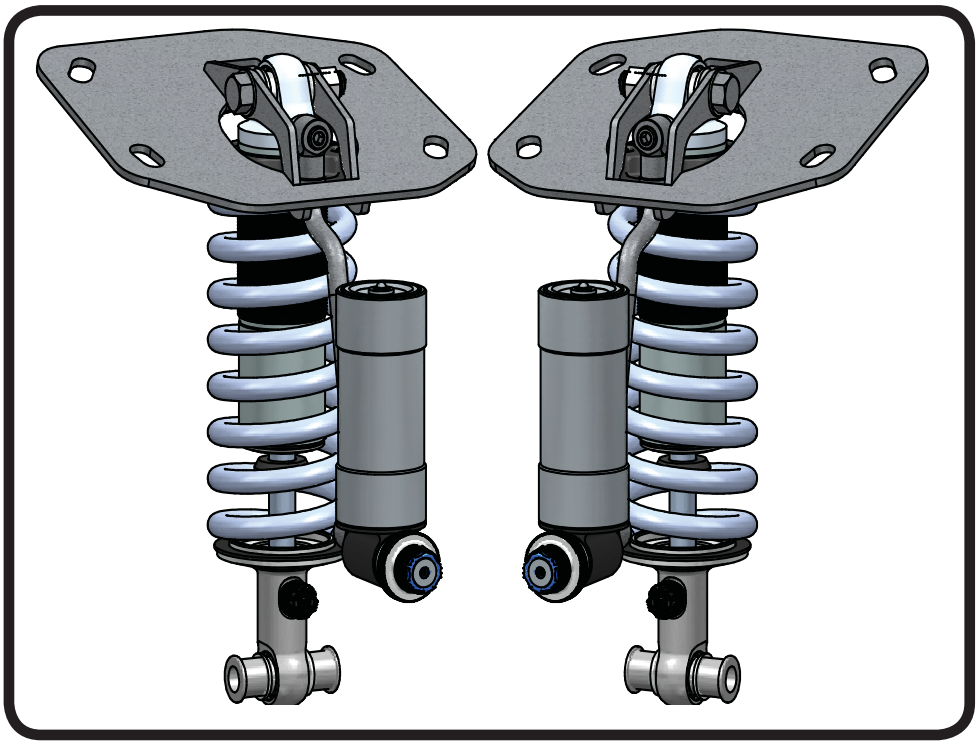

Recommended Tools

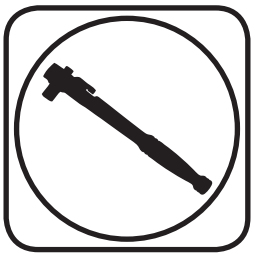

2010-up Camaro TQ Rear CoilOver

Installation Instructions

Table of contents

Page 12..... Included components
Page 13..... Disassembly and CoilOver Assembly
Page 14..... Assembly
Page 15..... Final Assembly and CoilSpring Adjustment
Page 16-17..... Shock Adjustment

www.ridetech.com
812-482-2932

Included Components .....In the box

Item #	Part #	Description	QTY
1	24339999	3.6″ Stroke TQ Series Shock	2
2	90002025	Shock Eyelet	2
3	90002382	Driver Upper CoilOver Mount	1
3	90002383	Passenger Upper CoilOver Mount	1
4	59080500	CoilSpring 8″ 500lb	2
5	70010828	Delrin Spring Washer	4
6	90002222(kit)	Lower Spring Adjuster Nut (90002222 kit)	2
7	90002222(kit)	Adjuster Nut Locking Screw (90002222 kit)	2
8	90002222(kit)	Upper CoilSpring Mount (90002222 kit)	2
9	90002043	Upper 1/2″ ID Shock Spacer (NARROW)	4
10	90002381	Lower 1/2″ ID Shock Spacer (WIDE)	4
	90001994	5/8″ ID Bearing (installed in shock and eyelet)	4
	90001995	Bearing Snap Ring (installed in shock and eyelet)	8
	90002221	Reservoir Mounts (Not Shown)	4
	85000003	Hex Wrench for Reservoir Mounting Screws (Not Shown)	1
13	99501011	1/2-20 x 2 1/2″ Hex Bolt	2
14	99503001	1/2″ SAE Flatwasher	4
15	99502008	1/2″-20 Hex Nut	2
	99050000	5mm Socket Head Cap Screws-Reservoir Mounting (Not Shown)	12

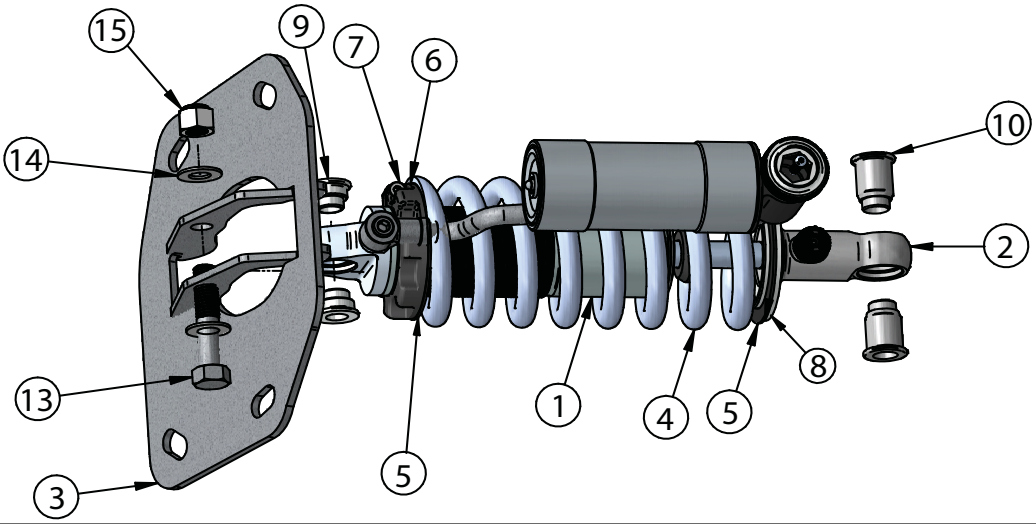

Disassembly

1. Raise the vehicle of the ground and safely support it by something other than the suspension.

2. Disconnect the swaybar linkage from the lower Control Arm.

3. Remove the Bolt attaching the OEM Shock setup from the lower control arm and retain it for reassembly.

4. Remove the (4) bolts attaching the upper shock mount. **Retain the Bolts for reassembly,**

5. Remove the bolt that attaches the Spindle to the lower control arm.

6. Swing the lower control arm down and remove the OEM Shock setup.

CoilOver Assembly

First using the supplied lower adjuster nut (90002222) thread the nut onto the shock from the bottom side as seen in figure A.

Next install delrin washers then coil spring over the top of the shock as seen in figure B.

Before the upper spring mount can be installed screw the adjuster knob on the upper eye mount to the firmest setting (clockwise) as seen in figure C.

Slide the Derlin washer over the spring, Next slide the upper spring mount (90002222) over eyelet as seen in figure D.

Install upper spring mount retainer clip (90002222) into the groove on the upper eyelet as seen in figure E. Then reinstall adjuster to complete assembly.

Assembly

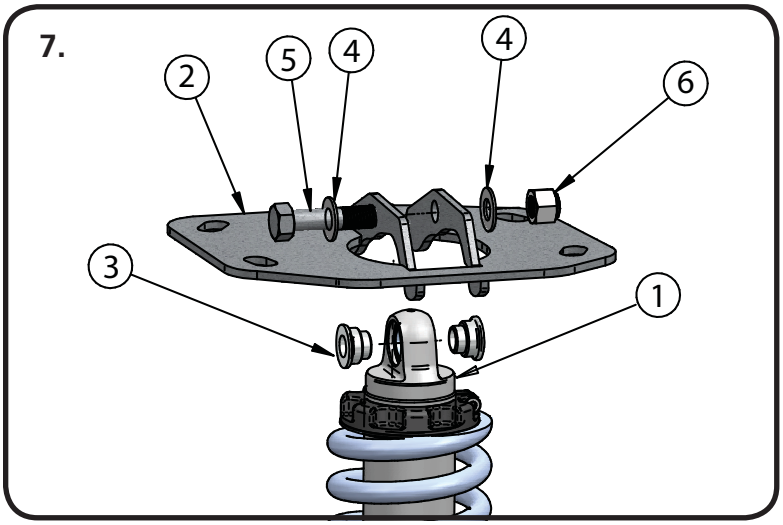

7. Assemble the CoilOver following the directions on the previous page. Install the shock body side of the CoilOver(1) into the upper mount(2) using a (90002403) spacer(3) installed into the bearing. With the spacers installed into the shock bearing, insert the Coilover into the mount aligning the holes in the mount with the thru hole in the bearing spacers. Install a 1/2" Flatwasher(4) on the 1/2 x 2 1/2" Hex bolt(5) and insert in the aligned holes. Finish by installing a 1/2" Flatwasher(4) and 1/2" Nylok nut(6) and tightening the nut/bolt.

8. Install the Coilover/Upper Mount assemble into the car using the factory hardware. There is a Driver and Passenger upper bracket. These brackets are marked accordingly. Once the assembly is installed in the car, rotate the shock eyelet so that the adjuster knob is towards the outside of the car.

Note: You will have to swing the lower arm down to get the assembly into the car.

9. Install the (90002381) spacers into the bearing in the CoilOver eyelet. Align the CoilOver eyelet with the factory mounting hole and reinstall the factory hardware and tighten.

www.ridetech.com
812-482-2932

Final Assembly

10. Reassemble car by reinstalling lower Control arm bolt through spindle and reattaching swaybar linkage to lower control arm and tightening hardware.

11. Repeat the previous steps on the other side.

12. Lower car to the ground slowly to check ride height. It maybe necessary to adjust the CoilSpring height to obtain you desired ride height. This kit is designed to lower the ride height of this car approximately 1 1/2".

CoilSpring Adjustment

Ride Height

We have designed most cars to have a ride height of about 2" lower than factory. To achieve the best ride quality & handling, the shock absorber needs to be at 40-60% overall travel when the car is at ride height. This will ensure that the shock will not bottom out or top out over even the largest bumps. Measuring the shock can be difficult, especially on some front suspensions. Measuring overall wheel travel is just as effective and can be much easier. Most cars will have 4-6" of overall wheel travel. One easy way to determine where you are at in wheel travel is to take a measurement from the fender lip (center of the wheel) to the ground. Then lift the car by the frame until the wheel is just touching the ground, re-measure. This will indicate how far you are from full extension of the shock. A minimum of 1.5" of extension travel (at the wheel) is needed to ensure that the shock does not top out. If you are more than 3" from full extension of the shock then you are in danger of bottoming out the shock absorber.

Adjusting Spring Height

When assembling the CoilOver, screw the spring retainer tight up to the spring (0 preload). After entire weight of car is on the wheels, jounce the suspension and roll the car forward and backward to alleviate suspension bind.

- If the car is too high w/ 0 preload then a smaller rate spring is required. Although threading the spring retainer down would lower the car, this could allow the spring to fall out of its seat when lifting the car by the frame.

- If the car is too low w/ 0 preload, then preload can then be added by threading the spring retainer up to achieve ride height. On 2.6" - 4" stroke shocks, up to 1.5" of preload is acceptable. On 5-7" stroke shocks, up to 2.5" of preload is acceptable. If more preload is needed to achieve ride height a stiffer spring rate is required. Too much preload may lead to coil bind, causing ride quality to suffer.

Strut Adjustment

Shock adjustment 101- **Single Adjustable**

Rebound Adjustment:
How to adjust your new shocks.
The rebound adjustment knob is located on the top of the shock absorber protruding from the eyelet.
You must first begin at the ZERO setting, then set the shock to a soft setting of 20.

-Begin with the shocks adjusted to the ZERO rebound position (full stiff). Do this by rotating the rebound adjuster knob clockwise until it stops.

-Now turn the rebound adjuster knob counter clock wise 20 clicks. This sets the shock at 20. (settings 21-24 are typically too soft for street use).

Take the vehicle for a test drive.

-If you are satisfied with the ride quality, do not do anything, you are set!

-If the ride quality is too soft increase the damping effect by rotating the rebound knob clock wise 3 clicks.

Take the vehicle for another test drive.

-If the vehicle is too soft increase the damping effect by rotating the rebound knob clock wise 3 additional clicks.

-If the vehicle is too stiff rotate the rebound adjustment knob counter clock wise 2 clicks and you are set!

Take the vehicle for another test drive and repeat the above steps until the ride quality is satisfactory.

Note:
One end of the vehicle will likely reach the desired setting before the other end. If this happens stop adjusting the satisfied end and keep adjusting the unsatisfied end until the overall ride quality is satisfactory.

STILL HAVE QUESTIONS?

Tech line hours
Monday - Friday
8AM - 6PM (EST) 812-482-2932

Shock Adjustment

Shock adjustment 101- **Triple Adjustable**

Triple Adjustable:
Step One: High Speed Compression

-High speed compression adjustments are used in both street driving and track tuning.

-Begin with the shocks adjusted to the ZERO high speed compression position (full stiff). Do this by rotating the high speed compression adjuster (large knob) clockwise until it stops.

-Now turn the high speed compression adjuster knob counter clock wise 20 clicks. This sets the shock at 20. (settings 21-24 are typically too soft for street use. For typical street driving the high speed compression adjuster will remain at setting 20.

Step Two: Low Speed Compression
Low speed compression adjustment is what is typically felt during street driving.

-Begin with the shocks adjusted to the ZERO low speed compression position (full stiff). Do this by rotating the low speed compression adjuster (small knob) clockwise until it stops.
-Now turn the low speed compression adjuster knob counter clock wise 20 clicks. This sets the shock at 20. (settings 21-24 are typically too soft for street use). Take the vehicle for a test drive.

-if you are satisfied with the ride quality, do not do anything, you are set!

-if the ride quality is too soft increase the damping effect by rotating the low speed compression knob clock wise 3 clicks.

Take the vehicle for another test drive.

-if the vehicle is too soft increase the damping effect by rotating the low speed compression knob clock wise 3 additional clicks.

-If the vehicle is too stiff rotate the low speed compression adjustment knob counter clock wise 2 clicks and you are set!

Take the vehicle for another test drive and repeat the above steps until the ride quality is satisfactory.

Step 3:
Adjust rebound according to Single Adjustable instructions.

Note:
One end of the vehicle will likely reach the desired setting before the other end. If this happens stop adjusting the satisfied end and keep adjusting the unsatisfied end until the overall ride quality is satisfactory.