INSTALLATION INSTRUCTIONS

MSD APS Starter
Chevrolet LS Series
PN 5096

IMPORTANT: Proper installation of the APS Starter is important to the overall operation. Correct alignment of the starter pinion with the ring gear is needed to achieve the best operation and longevity from your starter. Please read the instructions before attempting the installation.

ONLINE PRODUCT REGISTRATION: Register your MSD product online and you'll be entered in our monthly 8.5mm Super Conductor Spark Plug Wire give-away! Registering your product will help if there is ever a warranty issue with your product and helps the MSD R&D team create new products that you ask for! Go to www.msdperformance.com/registration.

Parts Included:

1 - Starter
2 - Mounting Bolts
1 - Shim Kit

WARNING: Before installing the APS Starter disconnect the battery cables. When disconnecting the battery cables, always remove the Negative (-) cable first and install it last.

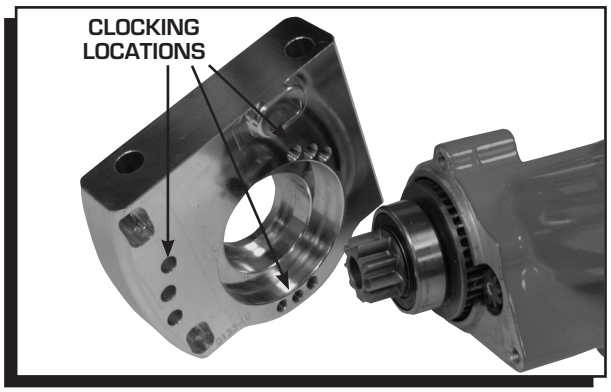

Figure 1 Clocking the Starter for Clearance.

1. Make sure the starter mounting flange on the engine block is clean and smooth.
2. Install the starter with the supplied hardware. It is recommended to leave the shims out until pinion gear to ring gear teeth is checked. Torque the bolts to 32 lb-ft.

Note: The supplied bolts **must** be used for proper installation.

3. Check that the position of the solenoid is away from direct heat sources and other components. If there are clearance problems, the starter housing can be rotated to move the location of the solenoid. This is done by removing the three bolts on the mounting block and repositioning the starter motor (Figure 1).

4. With the starter installed, check the clearance between the ring gear and the edge of the pinion gear (Figure 2). There should be at least 1/16". It is recommended to check this clearance in at least three places around the ring gear.

   - **If there is not enough clearance**, you will need to install the supplied shim kit by removing the mounting block (Figure 3). Place the small shim ring in the bearing bore and install the outer shim on the support housing. Reinstall the mounting block. This will move the pinion gear into the starter approximately 0.060".

5. To check the pinion gear mesh, gently pry the gear out to engage to the ring gear. (Sometimes the pinion will not retract. This is normal.) Insert a wire gauge as shown in Figure 4. As a gauge, a standard 1.25" paperclip could be used as they generally are about .035" in diameter. There should be .020"-.035" clearance between the ring gear tooth and the pinion gear.
   - **If there is not enough clearance**, install one of the supplied shims and check again.
   - **If there is too much clearance**, install a shim under the outer bolt only. This will tighten the clearance.
6. Connect the switch wire to the ignition terminal. This wire should be 12-gauge (Figure 5).
7. Attach the battery cable. The size of the battery cable depends on its length. Using the proper gauge wire is important to the operation of the starter. Both the positive and ground wires must be able to meet the demands of the starter. The chart in Figure 5 shows the recommended sizes. Be sure to route the wire away from the exhaust and moving parts of the engine.
8. Connect the battery terminals and start the engine.

IMPORTANT: Never operate a starter for more than 30 seconds at a time without letting it cool for at least two minutes.

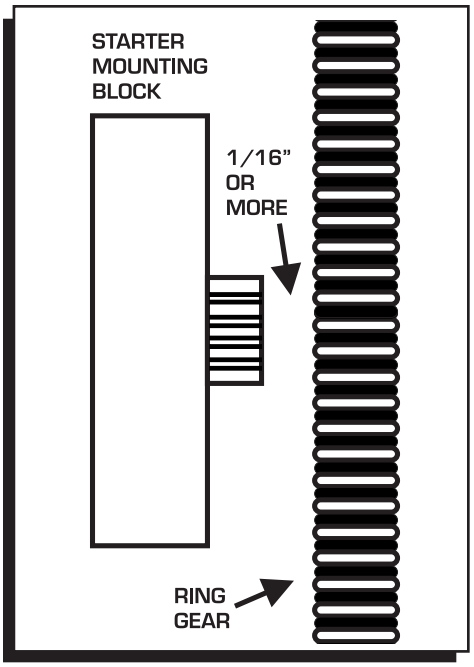

Figure 2 Checking Pinion Clearance.

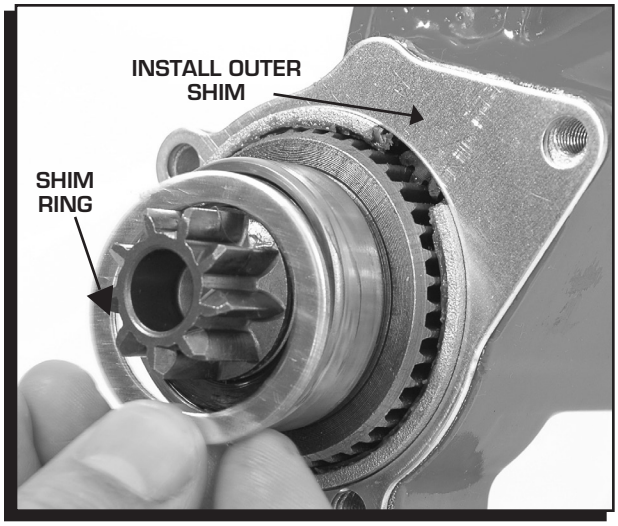

Figure 3 Installing the Pinion Shim Spacers.

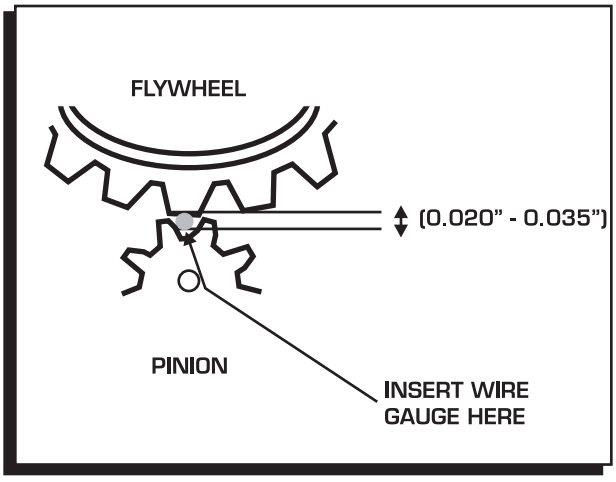

Figure 4 Checking Gear Mesh.

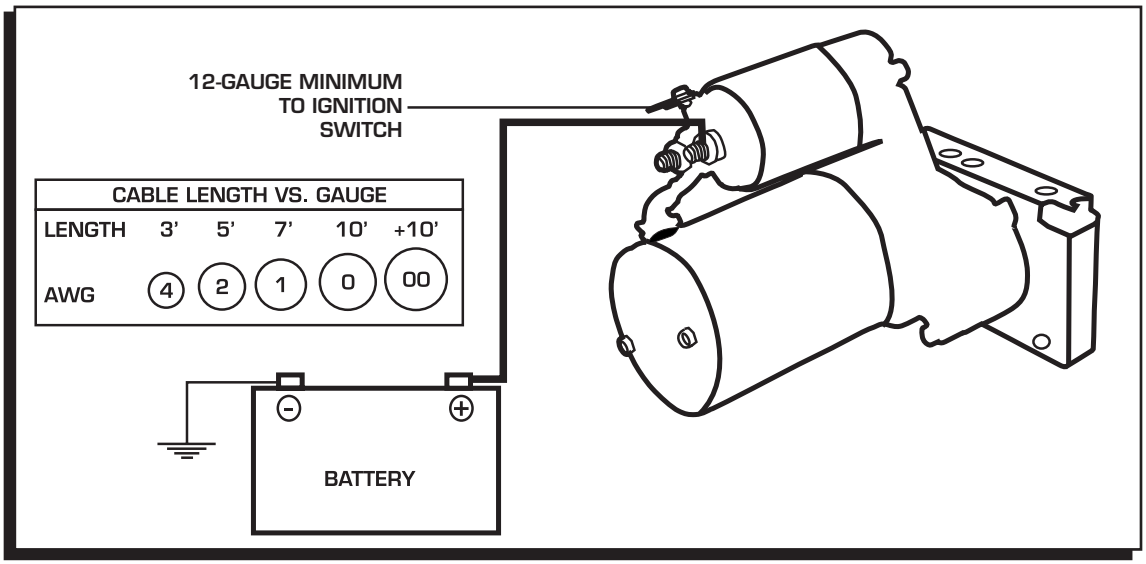

Figure 5 Wiring the Starter.

INSTALLATION INFO

NOISE

If there is a high pitch whine during cranking, the pinion to ring gear engagement may be out of specification, on the high side. If there is a whine after cranking there may be too little of clearance. The gear mesh spec is .020"-.035" (Figure 4).

SLOW CRANKING

The most common cause is due to low input voltage. The battery should be checked, but also inspect the battery wires, terminals, connections or switches.

DISCONNECT SWITCHES

Most sanctioning bodies require an emergency disconnect switch. Be sure to use a heavy duty switch that is capable of handling high current. Some starters may pull over 700 amps while cranking. Most disconnect switches are rated at continuous and intermittent amps. Make sure to use a switch that exceeds your starting and electrical system requirements.

TECH NOTES

MSD INSTALLATION INSTRUCTIONS

TECH NOTES

Service

In case of malfunction, this MSD component will be repaired free of charge according to the terms of the warranty. When returning MSD components for warranty service, **Proof of Purchase** must be supplied for verification. After the warranty period has expired, repair service is based on a minimum and maximum fee.

All returns must have a Return Material Authorization (RMA) number issued to them before being returned. To obtain an RMA number please contact MSD Customer Service at 1 (888) MSD-7859 or visit our website at www.msdperformance.com/rma to automatically obtain a number and shipping information.

When returning the unit for repair, leave all wires at the length in which you have them installed. Be sure to include a detailed account of any problems experienced, and what components and accessories are installed on the vehicle. The repaired unit will be returned as soon as possible using Ground shipping methods (ground shipping is covered by warranty). For more information, call MSD at (915) 855-7123. MSD technicians are available from 7:00 a.m. to 5:00 p.m. Monday - Friday (mountain time).

Limited Warranty

MSD warrants this product to be free from defects in material and workmanship under its intended normal use*, when properly installed and purchased from an authorized MSD dealer, for a period of one year from the date of the original purchase. This warranty is void for any products purchased through auction websites. If found to be defective as mentioned above, it will be repaired or replaced at the option of MSD. Any item that is covered under this warranty will be returned free of charge using Ground shipping methods.

This shall constitute the sole remedy of the purchaser and the sole liability of MSD. To the extent permitted by law, the foregoing is exclusive and in lieu of all other warranties or representation whether expressed or implied, including any implied warranty of merchantability or fitness. In no event shall MSD or its suppliers be liable for special or consequential damages.

*Intended normal use means that this item is being used as was originally intended and for the original application as sold by MSD. Any modifications to this item or if it is used on an application other than what MSD markets the product, the warranty will be void. It is the sole responsibility of the customer to determine that this item will work for the application they are intending. MSD will accept no liability for custom applications.

© 2012 Autotronic Controls Corporation
FRM30959 Revised 01/12 Printed in U.S.A.