RIDE-RITE
SPORT-RITE COIL-RITE
AIR HELPER SPRINGS

Read installation instructions in its entirety before installing your Coil-Rite Kit

NOTE 1:

If your vehicle is equipped with vibration dampers between the turns of the coil, it is necessary that these be removed before installing the air springs.

NOTE 2:

Some mid-size General Motors vehicles have a solid surface located on the lower spring seat which will not allow the air line to exit the coil. Removal of this cup is mandatory before installing the Coil-Rite air helper springs. The cup is spot welded and can be removed by using a chisel.

NOTE 3:

1991 and up Ford Crown Victoria, Mercury Grand Marquis, Chevy Suburban, Tahoe, GMC Yukon, Honda Passport and Isuzu Amigo, Rodeo, Trooper, and Nissan Patrol use Step 2B.

VEHICLE PREPERATION

With the vehicle on a solid level surface chock the front wheels. Raise the vehicle using a lift or platform jack rated for your vehicle weight to lift the rear wheels off the surface. Remove the rear wheels. Lower the vehicle onto jack stands rated for your vehicles weight making sure the suspension is fully extended. (Do NOT use wood or concrete blocks to support the weight of the vehicle.)

HEAT SHIELD

Before beginning the installation of your Coil-Rite kit, check the clearance from the coil spring to the exhaust. If there is less than two inches you will need to move the exhaust pipe for additional clearance. Heat shield instructions are on a supplemental sheet included with your kit. ***(Note: Heat shield is not used in the 4110 kit)***

PARTS LIST

AIR SPRINGS	2
LOWER SUPPORTS	2
18' AIR LINE	1
NYLON TIE	6
PUSH-TO-CONNECT INFLATION VALVE	2
5/16" FLAT WASHER	4

WARNING

Do not inflate the air springs when unrestricted. They must be restricted by a coil spring. Do not inflate beyond recommended operating pressures for your specific vehicle. Improper use or over inflation may cause property damage or severe personal injury.

SHOCK ABSORBERS

If necessary, additional clearance between the coil spring turns may be obtained by removing the shock absorbers from the lower mounts and lowering the suspension an additional one to two inches. (CAUTION: Do not put strain or tension on the flexible brake line.)

STEP 1 AIR SPRING PREPARATION

Cut a section of air line tubing 3 inches in length and install into the push-to-connect fitting on the air spring. Exhaust the air from the air spring by rolling it up toward the air inlet. Install the plug into the tubing coming out of the air spring.

STEP 2A INSTALLING THE AIR SPRING

Insert the flattened air spring into the coil spring through the lowest opening with the push-to-connect air inlet at the bottom of the coil spring refer to ***Figure "AA"***.

STEP 2B INSTALLING THE AIR SPRING

Insert the flattened air spring into the coil spring through the lowest opening with the push-to-connect air inlet at the top of the coil spring as shown in ***Figure "AB"***.

STEP 3 ADJUSTING THE AIR SPRING

Push the air spring up into the coil spring by hand or with a blunt tool, such as a spoon shaped tire iron or 1/2" extension. Do **NOT** use anything with sharp edges or corners as this may damage the air spring.

STEP 4 PLACING SUPPORTS

When the air spring is completely within the coil spring, remove the plug and short piece of air line by pushing the collar of the fitting towards the air spring. Allow the air spring to return to its normal shape. Push the air spring to the top of the coil spring. Insert the support between the air spring and the coil spring seat as shown in ***Figures "BA", "BB" and "C"***.

OPERATING PRESSURES

PASSENGER CARS	5-30 p.s.i.
1/2 TON VEHICLES	5-30 p.s.i.
SUV's	5-25 p.s.i.

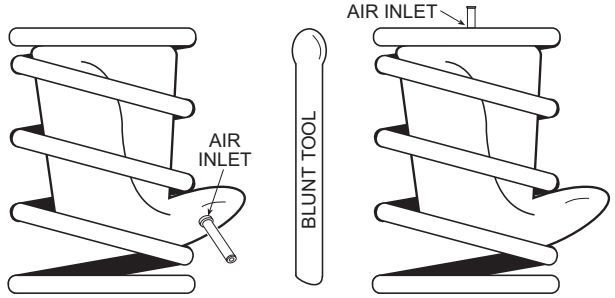

Figure "AA" Figure "AB"

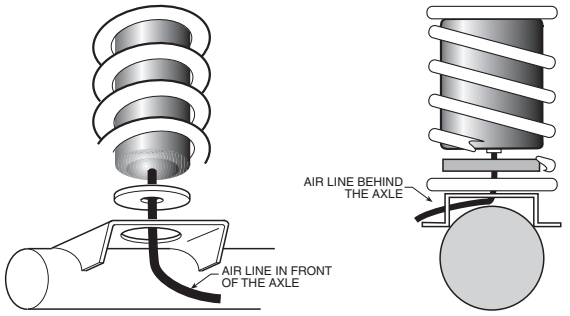

Figure "BA"

GM 1967-1972 vehicles, Ford 1966-1978 vehicles air line behind the axle.

Figure "BB"

GM 1973 & up Passenger Cars, Ford 1979-1990 vehicles air line behind the axle.

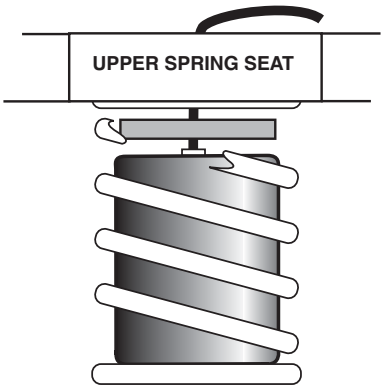

Figure "C"

1991 and up Ford Crown Victoria
1991 and up Mercury Grand Marquis

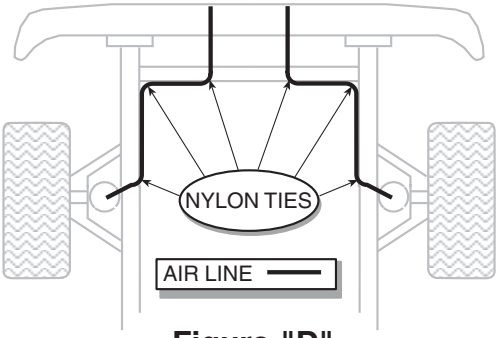

Figure "D"

Step 5 Reattach the Shock Absorber

Attach shock absorbers if removed earlier in the installation.

Step 6 Route the Air Line

Cut the air line tubing into two equal lengths (cut the tubing as squarely as possible). Select a location for the inflation valves in a protected area, such as: on the bumper or body (Note: The inflation valve will be installed in step 8).

Insert the air line tubing into the push-to-connect fitting on the air spring as far as possible. Route the air line from the air spring to the desired inflation valve location.

Step 7 Hose Attachment to the Vehicle

With the tubing routed from the air spring to the location of the inflation valve. Use the nylon ties supplied to secure the air line tubing to the vehicle as shown in ***Figure "D"***. Be careful to avoid heat and sharp edges when fastening the tubing to the vehicle. Route the tubing away from the exhaust system.

Step 8 Installing the Inflation Valve

Drill a 5/16" hole where you wish to mount the inflation valve. Remember to keep the inflation valve in a protected area that is easily accessible. Attach the inflation valve to the bumper or body of the vehicle as shown in ***Figure "E"***. Tighten all nuts at this time.

Cut the excess air line tubing so that it will fit easily into the inflation valve, making sure the end is cut squarely (a "saw" cut with a sharp knife is preferred). Push the end of the tubing into the inflation valve as far as possible.

Follow steps 1-8 for the other side

Step 9 Inflate and Test

Inflate the air springs to recommended maximum operating pressure (see page 1 for operating pressures). With a soap and water solution, check for air leaks around the fittings and valve core. Remove the jack stands and lower the vehicle to the ground. Inflating and deflating in 5 p.s.i. increments to find the ideal riding condition for your vehicle.

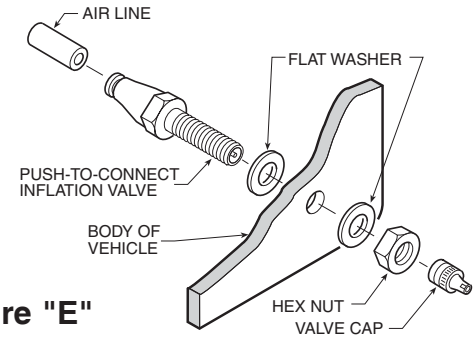

Figure "E"

Do Not Return This Product to the Dealer or Distributor

If you are

- **missing parts,**
- **experiencing installation problems, or**
- **have technical concerns regarding this product,**

you may contact a Firestone Technical Service Representative at **rrtech@fsip.com** or at 800-888-0650 (option 1, and then option 2). Representatives are available from 7:30 a.m. – 4:30 p.m. Eastern on Monday – Friday, excluding holidays. If you are located outside of the United States, you should first contact your distributor or dealer directly with any issues.

When contacting Technical Service, please have the kit or part # ready, along with the make, model, and year of the vehicle. You may also need to provide details, such as 2WD/4WD or if the vehicle has been lifted or lowered from stock height.

If you have a warranty concern, please include in your email a detailed description of the situation, a photo(s) of the issue, and your contact information, including ship-to address.

WARRANTY COVERAGE*— The Ride-Rite™ kits, components, and accessories are warranted against defects in workmanship and materials. This warranty does not cover service or labor charges, neglect…to the product.

PERIOD OF COVERAGE:

- Ride-Rite air springs – Lifetime Limited
- Sport-Rite air springs – Lifetime Limited
- Coil-Rite air springs – Lifetime Limited
- Level-Rite air springs – Lifetime Limited
- Work-Rite load assists – 2 Years Limited
- Air-Rite accessories – 2 Years Limited
- Brackets, hardware, fittings, air line, and other components – 2 Years Limited

HOW TO MAKE A WARRANTY CLAIM — If you purchased your air springs in the U.S. or Canada and believe you have a part with a warrantable defect, call Firestone directly at 1-800-888-0650.

International customers should contact their distributors or dealers directly with any problems.

(*) Please refer to the “Firestone Limited Lifetime Air Spring Warranty” for details, terns, and conditions.

FIRESTONE LIMITED LIFETIME AIR SPRING WARRANTY

Firestone Industrial Products Company LLC ("Firestone") warrants that its Ride Rite Air Spring Assembly will perform according to the manufacturer's specifications for as long as the vehicle on which the system was originally installed is owned by the original retail purchaser. This limited warranty does not include installation or other service charges for replacement.

Warranty Period

The Air Spring is warranted for as long as the original purchaser owns the vehicle on which it was originally installed. The fasteners and upper and lower brackets which accompany the air spring are warranted for a period of twenty-four (24) months or 24,000 miles whichever occurs first. This warranty begins on the original retail delivery date.

What is Covered

Any implied warranties are limited in duration to the coverage period of this warranty (some states do not allow limitation on how long an implied warranty lasts so the above limitation may not apply to you). This Warranty runs in favor of the original retail purchaser when the Ride Rite Air Spring Assembly is used under normal operating conditions according to Firestone's specifications and installed on the appropriate application. This warranty does not apply to Ride Rite Air Spring Assemblies that have been improperly applied, improperly installed, used in racing or off road applications or used for commercial purposes. In addition, the warranty will not apply to products which have not been maintained and serviced according to the instructions that accompany the air spring assembly. The consumer will be responsible for any costs incurred in removing the product from the vehicle and the cost to return the air spring assembly to the dealer or installer from which it was purchased. If it is determined that the Ride Rite Air Spring Assembly failed as a result of a manufacturing defect, Firestone will repair or replace, at its option, any product or components subject to this warranty. You should retain a copy of your contract with your installer and your receipt as proof of the date of installation. This warranty is non-transferable and is not assignable in any way.

Firestone specifically excludes any obligation for consequential damages or incidental expenses including claims for loss of use of the product, loss of time, inconvenience, or commercial loss. This warranty gives you specific legal rights. You may also have other rights that may vary from state-to-state. Some states do not allow limitations on how long an implied warranty lasts or allow the exclusion or limitation of incidental or consequential damages. The above limitation or exclusion may not apply to you. There are no warranties, express or implied, including implied warranty of merchantability and fitness which extend beyond this warranty.

RIDE-RITE
AIR HELPER SPRINGS

Firestone
World's Number 1
Air Spring.
FIRESTONE INDUSTRIAL PRODUCTS COMPANY