RIDE-RITE
SPORT-RITE COIL-RITE
AIR HELPER SPRINGS

Read installation instructions completely before installing your Coil-Rite Air Helper Springs.

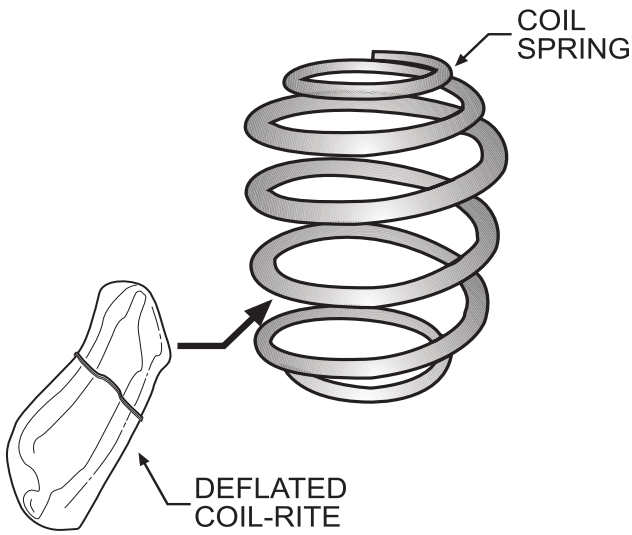

FIGURE "A"

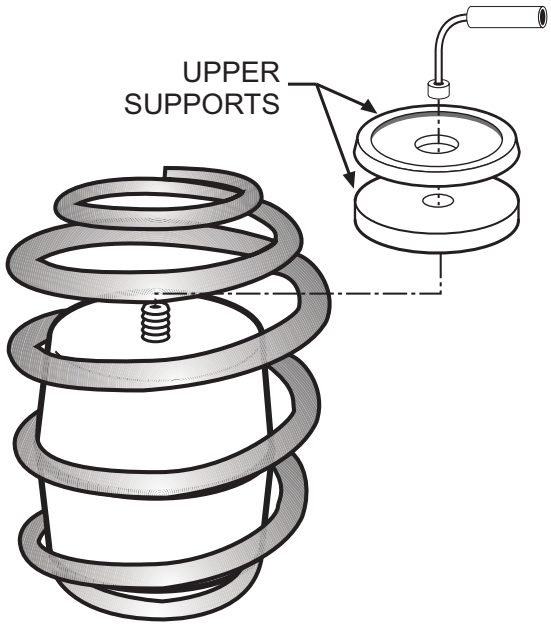

FIGURE "B"

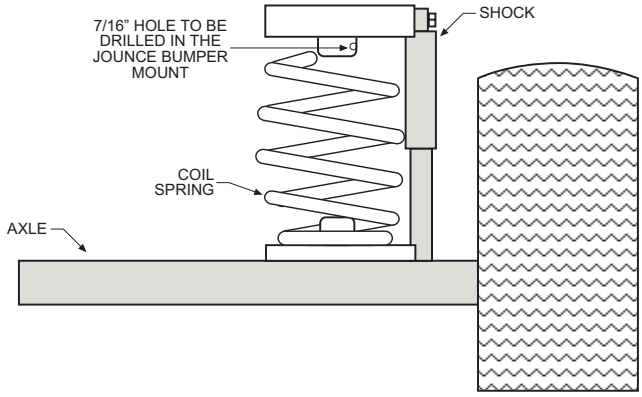

FIGURE "C"

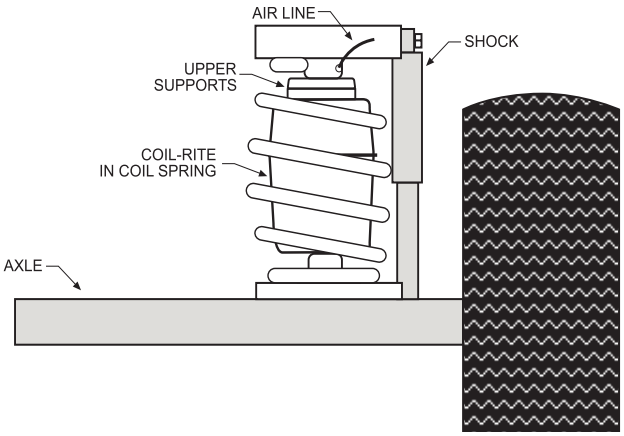

FIGURE "D"

PARTS	***QTY.***
AIR SPRINGS	2
SANTA FE UPPER SUPPORTS	2
UPPER SUPPORTS	2
18' AIR LINE WITH FITTINGS	1
NYLON TIE	6
INFLATION VALVE	2
5/16" FLAT WASHER	4

RECOMMENDED OPERATING PRESSURES	
SUV'S	5 - 35 PSI
VANS	5 - 35 PSI

STEP 1 VEHICLE PREPARATION

With the vehicle on a solid level surface chock the front wheels and raise the rear of the vehicle using a jack rated for your vehicles' weight to lift the wheels off the surface. Lower the vehicle frame onto jack stands rated for your vehicles weight making sure the suspension is fully extended. (Do not use wood or concrete blocks to support the weight of the vehicle.) Remove the negative battery cable.

STEP 2 SHOCK ABSORBERS

To obtain additional clearance between the coils turns obtained by removing the shock absorbers lower bolt and lowering the suspension and additional one to two inches. (**CAUTION:** Do not put strain or tension on the flexible brake line.)

STEP 3 AIR SPRING PREPARATION

Remove the inflation valve cap from the inflation valve on the air spring. Using the valve cap from the inflation valve as a core tool from the inflation valve, remove the inflation valve core from the air spring. Exhaust the air spring by pushing it flat then re-insert the valve core back into the air spring to keep it collapsed.

STEP 4 INSTALLING THE AIR SPRING

Insert the flattened air spring into the coil spring with the inflation valve at the top as shown.

STEP 5 ADJUSTING THE AIR SPRING

Push the air spring up into the coil spring by hand or with a blunt tool. **DO NOT** use anything with sharp edges or corners as this may damage the air spring.

When the air spring is completely within the coil spring, remove the valve core to let the air back into the air spring. Allow the air spring to return to its normal shape. Place the upper protectors on top of the spring.

Cut the air line tubing into two equal lengths (cut the tubing as squarely as possible). Screw the elbow fitting with the tubing onto the inflation valve fitting coming out of the air spring.

STEP 6 ROUTE THE AIR LINE

Select a location for the inflation valves in a protected area, such as the bumper Note: The inflation valve will be installed in the next step.

Route the tubing from the air spring to the anticipated location of the of the inflation valve, making sure to avoid direct heat from the engine, exhaust pipe and away from sharp edges. Secure the air line with Nylon ties that are provided in your kit.

STEP 7 INSTALL THE AIR LINE AND INFLATION VALVE

Select a location on the vehicle for the air inflation valves. The location can be located on the bumper on the body of the vehicle, as long as it is in a protected location so the valve will not be damaged, but maintain accessibility for the air chuck. Drill a 5/16" hole and install the air inflation valve using two 5/16" washers per valve as supports.

STEP 8 INFLATE AND TEST

Inflate the air springs to recommended operating pressure. With a soap and water solution, check for air leaks around the fittings and valve core. We recommend inflating and deflating in five psi increments to find the ideal riding condition for your truck.

STEP 9 COMPLETION

Re-attach the shocks if necessary and the wheels. Torque all nuts and lug nuts to manufacture's specifications. Raise the vehicle are remove the jack stands and lower the vehicle back onto the ground. Reattach the battery cable.

NOTE: Check air pressure on a monthly basis.

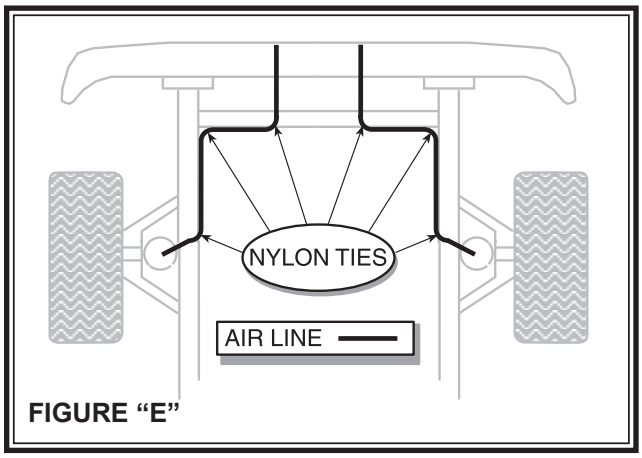

FIGURE "E"

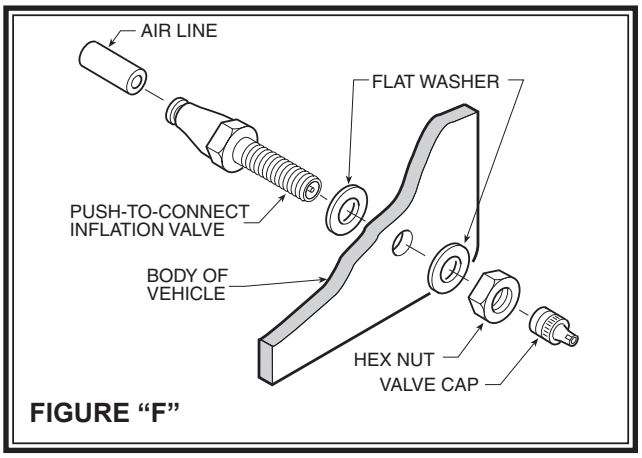

FIGURE "F"