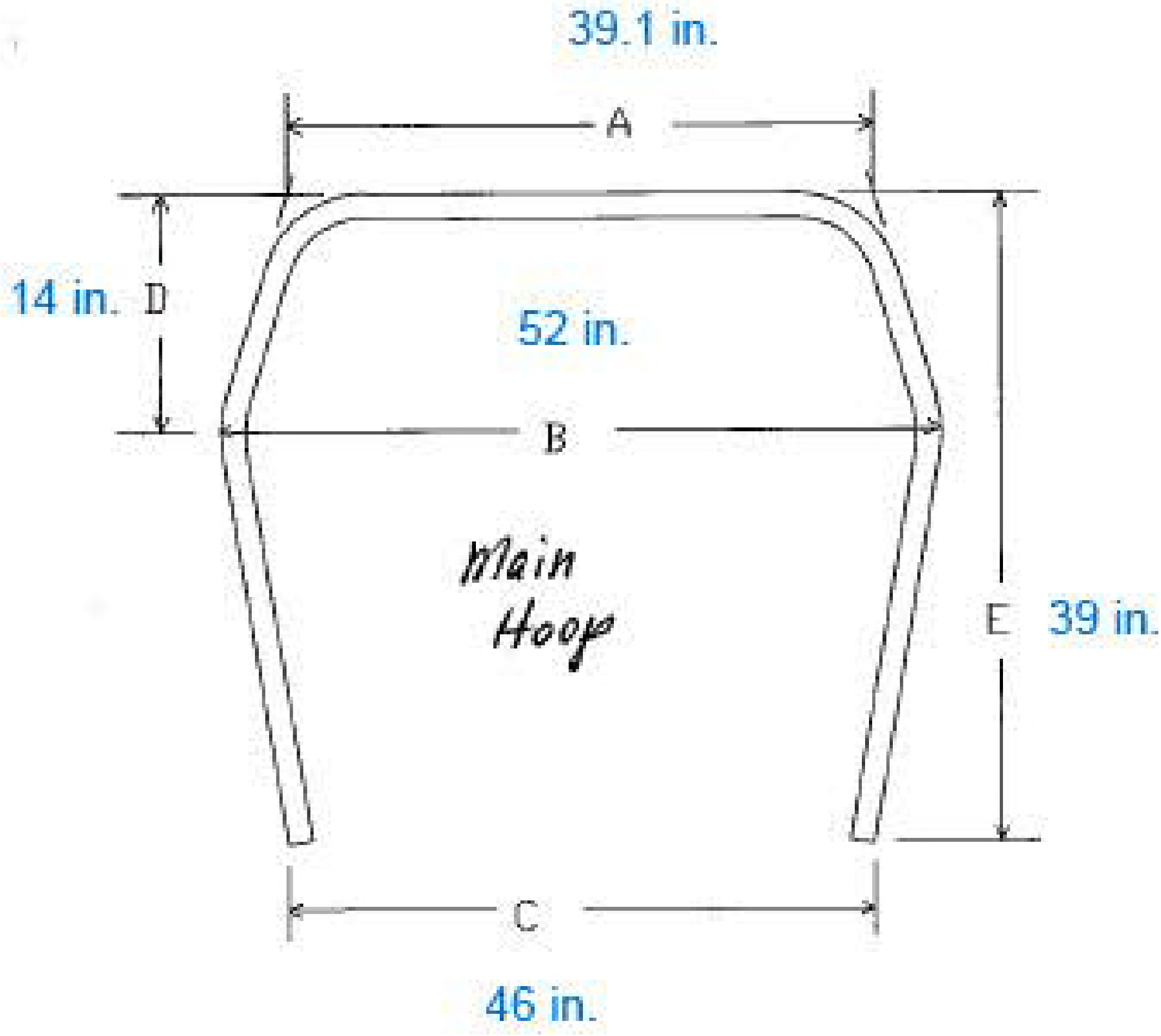
39.1 in.
A
14 in.
D
52 in.
B
Main
Hoop
E
39 in.
C
46 in.