Installation Instructions
Flush Mount Tire Valve
Part #5102

1. Insert tire valve into wheel with valve core facing outward (refer to illustration).
2. Slide rubber washer, steel washer and hex nut onto threaded end of tire valve and tighten hex nut securely.
3. To inflate tire, screw valve stem air adapter into tire valve and inflate to proper PSI. Remove valve stem air adapter, install valve cap and tighten securely.

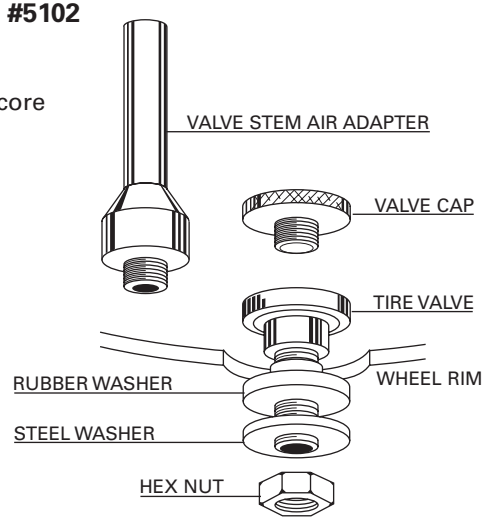

The Mr. Gasket Performance Group
10601 Memphis Ave. #12
Cleveland, OH 44144
www.mrgasket.com

Form No. 97140014

Installation Instructions
Flush Mount Tire Valve
Part #5102

1. Insert tire valve into wheel with valve core facing outward (refer to illustration).
2. Slide rubber washer, steel washer and hex nut onto threaded end of tire valve and tighten hex nut securely.
3. To inflate tire, screw valve stem air adapter into tire valve and inflate to proper PSI. Remove valve stem air adapter, install valve cap and tighten securely.

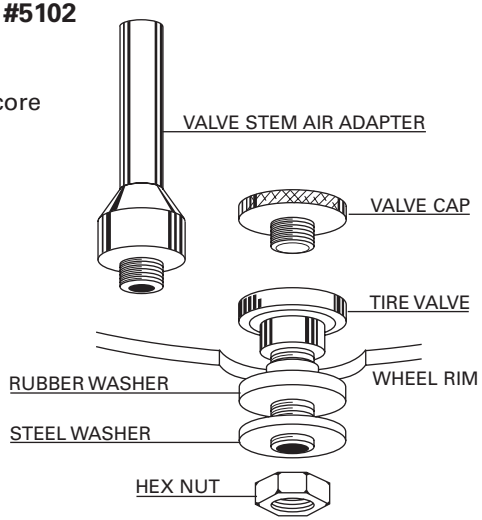

The Mr. Gasket Performance Group
10601 Memphis Ave. #12
Cleveland, OH 44144
www.mrgasket.com

Form No. 97140014

Installation Instructions
Flush Mount Tire Valve
Part #5102

1. Insert tire valve into wheel with valve core facing outward (refer to illustration).
2. Slide rubber washer, steel washer and hex nut onto threaded end of tire valve and tighten hex nut securely.
3. To inflate tire, screw valve stem air adapter into tire valve and inflate to proper PSI. Remove valve stem air adapter, install valve cap and tighten securely.

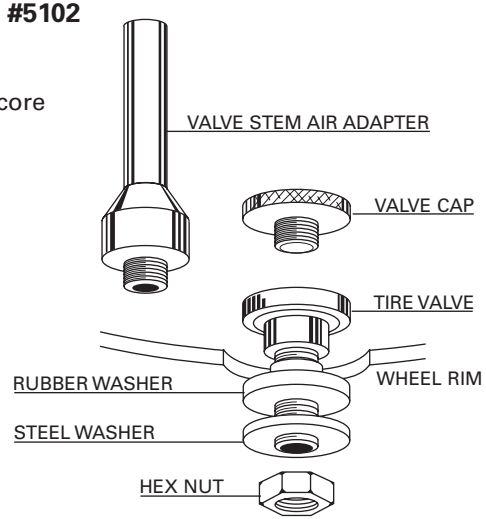

The Mr. Gasket Performance Group
10601 Memphis Ave. #12
Cleveland, OH 44144
www.mrgasket.com

Form No. 97140014

Installation Instructions
Flush Mount Tire Valve
Part #5102

1. Insert tire valve into wheel with valve core facing outward (refer to illustration).
2. Slide rubber washer, steel washer and hex nut onto threaded end of tire valve and tighten hex nut securely.
3. To inflate tire, screw valve stem air adapter into tire valve and inflate to proper PSI. Remove valve stem air adapter, install valve cap and tighten securely.

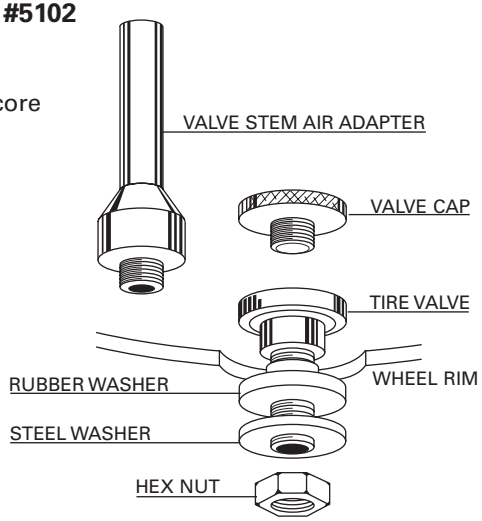

The Mr. Gasket Performance Group
10601 Memphis Ave. #12
Cleveland, OH 44144
www.mrgasket.com

Form No. 97140014