Installation Instructions

For Part Numbers:

200-289	**720-472 Airaid Oiled Media Filter**
201-289	**721-472 SynthaMax Dry Media Filter - Red**
202-289	**722-472 SynthaMax Dry Media Filter - Black**
203-289	**723-472 SynthaMax Dry Media Filter - Blue**

2006 GMC Sierra 2500HD/3500HD
2007 GMC Sierra Classic 2500HD/3500HD
6.6L V8 Duramax Diesel LLY & LBZ

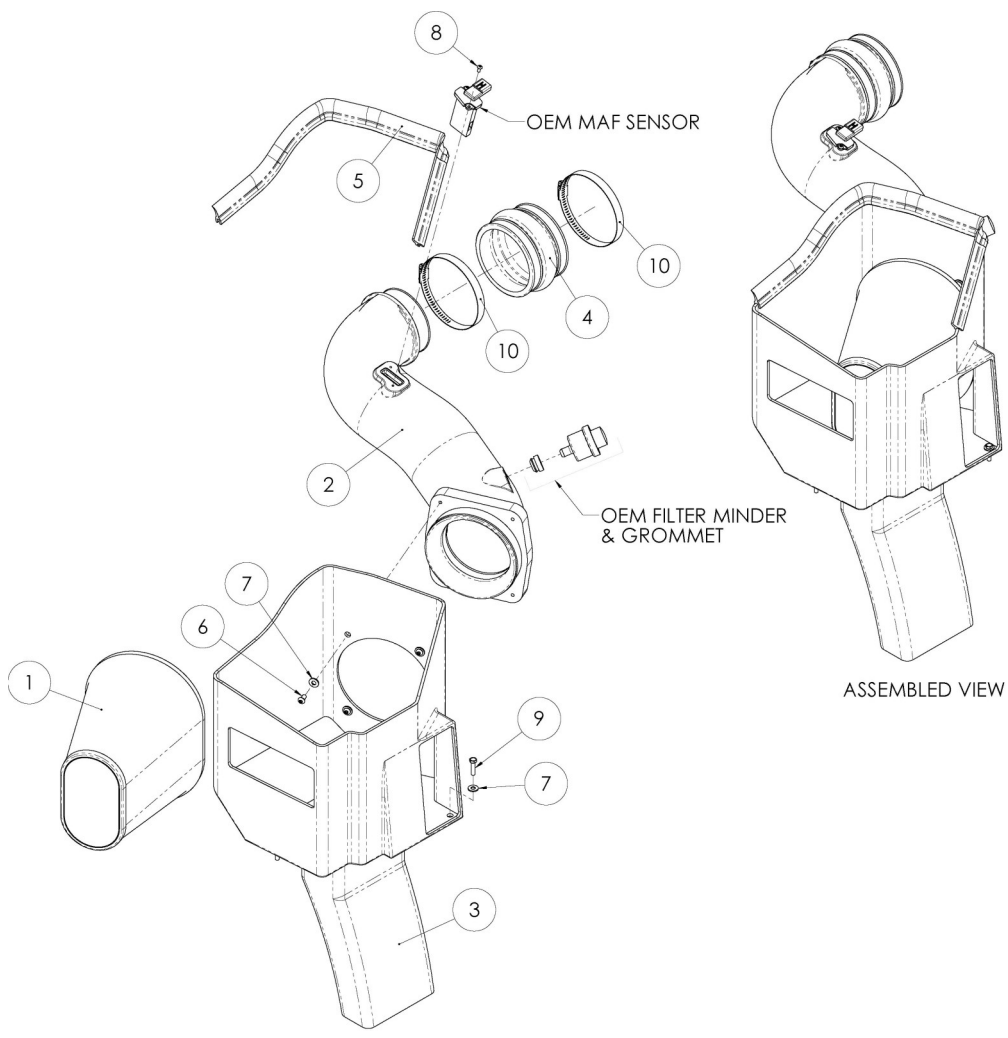

Component Identification

1.	Airaid Premium Filter	1
2.	Airaid Intake Tube	1
3.	Cool Air Box	1
4.	Urethane Hump Hose	1
5.	Weather Strip 25”	1
6.	¼ - 20 x 1/2” Button Head Bolt	4
7.	¼” Flat Washer	7
8.	8-32 x 3/8” Button Head Screw	2
9.	M6 x 1 x 25mm Hex Bolt	3
10.	#72 Hose Clamp	2

Full color instructions can be viewed on our web site at Airaid.com. Use the **Product Search** function to find your part number, and click **View Details**.

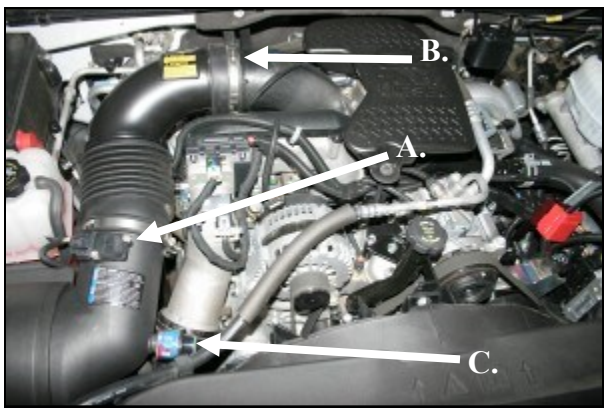

1. Disconnect the negative battery cables.
A.) Using a #20 Torx bit, remove the two screws and the **M**ass **A**ir **F**low sensor from the factory intake tube.
B.) Loosen the hose clamp at the rubber coupler.
C.) Remove the factory filter minder and grommet and save them for reinstallation in step # 7.

2. Rock the air filter housing back and forth while lifting up, and remove the factory intake assembly from the vehicle. There are only grommets holding it in place.

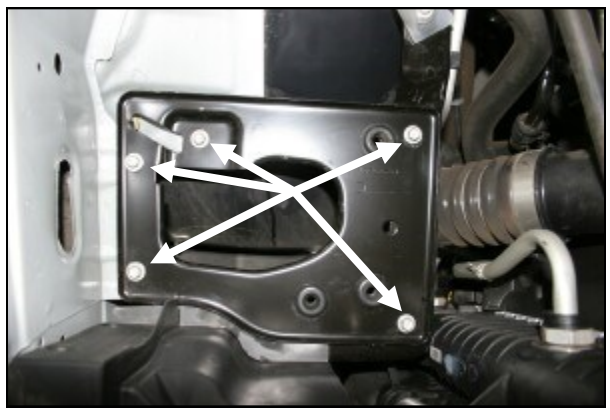

3. Using a 10mm socket, remove 5 bolts, and then remove the factory air filter mounting plate.

4. Install the Airaid **C**ool **A**ir **B**ox (**CAB**) (#3) into the vehicle as shown, replacing the factory air filter. Install three M6-1 x 25mm bolts (#9), and three flat washers (# 7) thru the bottom of the **CAB** and into the factory captured nuts. Leave the bolts loose for now.

5. Install two #72 hose clamps (#10) onto the urethane hump hose (#4), and then slip the hump hose onto the end of the factory turbo intake tube as shown. Leave the clamps loose for now.

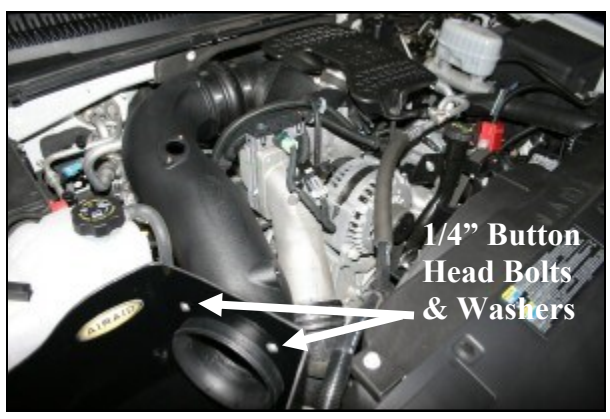

6. Slide the Airaid Intake Tube (#2) into the **CAB** first, and then into the hump hose. *If needed, the factory turbo intake tube can be adjusted for proper alignment.* Next install four 1/4” button head bolts (#6), and four flat washers (#7) thru the **CAB** to secure the Airaid Intake Tube. Now tighten the three bolts at the bottom of the **CAB** and the two hose clamps on the hump hose.

7. A.) Reinstall the **M**ass **A**ir **F**low sensor into the Airaid Intake Tube using two 8-32x 3/8" button head screws (#8). **Do Not Use The Factory Screws!**
B.) Next, reinstall the factory filter minder and grommet into the Airaid Intake Tube.

8. The Airaid Premium filter (#1) is a very tight fit in the **CAB**. For ease of installation, hold the filter in your right hand, and guide the bottom of the filter past the flange of the tube with your left hand inside of the **CAB**. It will fit! Tighten the hose clamp.
Next install the weather strip (#5) on top of the **CAB**, starting at the fender and working your way towards the radiator.

9. Congratulations on the successful install of your new Airaid Intake System!

Double check your work!

Make sure there is no foreign material in the intake path. Make sure all clamps, hoses, bolts, and screws are tight.

Reconnect the negative battery cables!

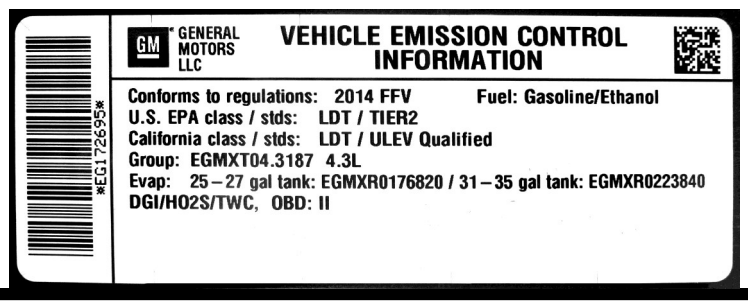
GENERAL MOTORS LLC
VEHICLE EMISSION CONTROL INFORMATION
Conforms to regulations: 2014 FFV Fuel: Gasoline/Ethanol
U.S. EPA class / stds: LDT / TIER2
California class / stds: LDT / ULEV Qualified
Group: EGMXT04.3187 4.3L
Evap: 25 – 27 gal tank: EGMXR0176820 / 31 – 35 gal tank: EGMXR0223840
DGI/HO2S/TWC, OBD: II
EG172695

WARNING! If your vehicle has a Vehicle Emission Control Information decal affixed to the factory airbox, a new replacement label must be obtained and installed in a readily visible position in the engine compartment in order to remain CARB compliant. Failure to do so will prevent the vehicle from passing a smog check. Replacement labels can be ordered from your local dealership. Regulations state that the VECI label shall not be affixed to any equipment which is easily detached from the vehicle. Label placement, under the hood on a painted surface is recommended.

Thank you for purchasing the Airaid Intake System. Contact Airaid @ (800) 498-6951 8:00 AM - 5:00 PM MST weekdays for questions regarding fit or instructions that are not clear to you. Your Airaid Intake System was carefully inspected and packaged. Check that no parts are missing, or were damaged during shipping. If any parts are missing, contact Airaid. The air filter element is protected from direct exposure to water and debris; care should be taken not to drive through deep water. WATER INGESTION IS THE DRIVERS RESPONSIBILITY! The air filter is reusable and should be cleaned periodically.

FILTER IDENTIFICATION

720-472 Airaid Oiled Media
722-472 Airaid SynthaMax Dry Media - Black
721-472 Airaid SynthaMax Dry Media - Red
723-472 Airaid SynthaMax Dry Media - Blue

For your Oiled media filter we suggest using the AIRAID Filter Tune-Up Kit!

P/N 790-551 Aerosol Spray
P/N 790-550 Squeeze Spray

SynthaMax®

Do Not Oil

Synthamax Air Filters do not require oil. Service air filter as needed by cleaning with common non-petroleum all-purpose household cleaner and water. Simple Green®, Formula 409® or equivalent works great. Apply cleaner to outside of air filter and allow to soak. Then flush filter clean from the inside out with a garden hose and repeat steps if necessary. Do not apply high pressure water or air to clean filter. Allow filter to air dry and reinstall.