Torque Converter Installation Instructions

Ford, Lincoln, Mercury C-4, C-6 and AOD

© 1995, 2002 B&M Racing and Performance Products

Congratulations. You have just purchased the best performing and highest quality torque converter available. We feel the installation instructions on the following pages are as complete and clear as possible. Anyone with a minimum of mechanical experience should be capable of installing a torque converter using the proper tools and following instructions. It is important to closely follow the instructions. Read each step and if you don't understand go back and read it again.

Included are part numbers for flexplates and other components which may aid in installation. Every attempt has been made to assure the accuracy of this information. These instructions are aimed at making your installation as easy and simple as possible.

INTRODUCTION

The torque converter in your automatic transmission is a unique device and must perform several functions:

First, it must provide some slip at an idle so the engine does not stall when the vehicle is stopped and the engine is running.

Second, it multiplies torque under initial accelerations to provide more power to the rear wheels. The typical torque multiplication of a torque converter is about 2:1. This means that the torque converter is actually doubling engine torque or power on initial acceleration. Some high stall converters have torque multiplication as high as 2.6:1.

Third, the torque converter must have as little slippage as possible under normal driving conditions so the engine operates efficiently. High stall speed converters are designed to be as efficient as possible at high rpm for maximum mph.

Fourth, the torque converter must have reverse coupling to slow the vehicle when you downshift to second or low. **Traveler** torque converters are designed to give maximum deceleration for improved engine braking.

All of the above functions occur automatically under various operating conditions. The torque converter is a simple and yet complex piece of equipment. **Improper installation will result in poor performance and possible damage to the torque converter and/or transmission**. Read all instructions first to familiarize yourself with the parts and procedures. Work slowly and do not force any parts. Burrs and dirt are the number one enemies of automatic transmission assembly. Cleanliness is very important. Avoid getting any dirt or foreign particles in the transmission or torque converter.

Automatic transmissions operate at temperatures between 150^{0}F and 250^{0}F. It is suggested that the vehicle be allowed to cool for a few hours to avoid burns from hot oil and parts. The vehicle should be off the ground for ease of installation. Jack stands, wheel ramps or a hoist will work fine. **Make sure the vehicle is firmly supported!!** Try to raise it 1 - 2 feet so you have plenty of room to work easily. Also have a small box or pan handy to put bolts in so they won't be lost, and a drain pan to catch oil. We suggest you rent a transmission jack from a rental yard to remove the transmission as the transmission/converter assembly is heavy. A regular floor jack may be used if a transmission jack is unavailable.

Due to variations between different car models, exact instructions for every vehicle cannot be provided. These instructions are sufficient for all vehicle installations. You may find it necessary to disconnect and lower exhaust pipes during transmission removal.

STEP 1. Drain oil pan. This will make less of a mess during transmission removal. C-6, C-4 and AOD transmissions do not have drain plugs. Some models of C-4 transmissions have a dipstick tube which screws into the oil pan. This can be loosened to drain the oil pan. If you do not have a drain plug, you should consider installing a B&M Drain Plug Kit, P/N 80250, while transmission is out of vehicle. If your transmission does not have a drain plug or a dipstick tube in the oil pan, loosen the oil pan bolts to allow the fluid to drain. After the fluid has drained, snug the oil pan back into place.

STEP 2. Remove driveshaft. Be careful not to damage the smooth bushing diameter on slip yoke models. Do not let the cups fall off the U-joint crosses.

Printed in the U.S.A.

9500198-03

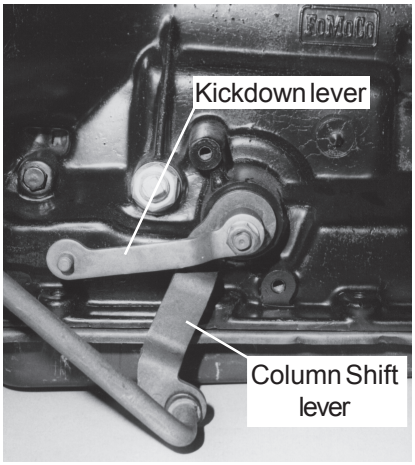

Figure 1

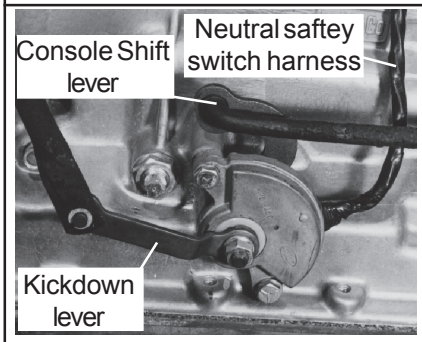

Figure 2

You may lose some of the needle bearings if the cups fall on the ground. It is a good idea to tape the cups to the U-joint cross, so they won't fall off. Now is a good time to clean and inspect your U-joints.

STEP 3. Disconnect vacuum line to vacuum modulator. Disconnect kickdown linkage. (See Figs. 1&2) Remove clip holding rod or cable to kickdown lever and allow rod or cable to hang free. Disconnect shifter:

Column Shift Models: Disconnect rod or cable from shift lever on transmission. (See Fig. 1) The rod or cable is retained by a clip or by snapping into a plastic grommet. Remove clip or pry rod out of grommet and allow linkage to hang free. Cable models; unbolt cable bracket from bell housing and allow cable to hang free.

Console Shift Models: Disconnect rod from shift lever on transmission. (See Fig. 2) The rod is retained by a clip or by snapping into a plastic grommet. Remove clip or pry rod out of grommet and allow linkage to hang free.

'70 and Later Vehicles Equipped With Locking Steering Column And Console Shifter: Disconnect column lock rod from transmission shift lever and allow it to hang free.

4 Wheel Drive Models: Remove knob from transfer case shift lever.

STEP 4. Loosen and disconnect speedometer cable:

Clamp Type Cable: Remove bolt or speedometer cable clamp. Pull speedometer cable out of extension housing and let it hang free.

Sleeve Type Cable: Loosen cable sleeve. Pull speedometer cable out of speedometer housing and let it hang free.

STEP 5. Disconnect oil cooler lines. Use a fitting wrench, if available, to avoid damage to compression nuts. We recommend that the oil cooler lines be flushed out to remove any foreign particles trapped in the cooler. Cooler lines should be flushed in both directions with solvent and air pressure.

STEP 6. Remove dipstick and tube assembly. Remove torque converter access cover bolts and remove converter access cover. Remove flexplate to converter nuts. Use starter motor to "bump" each bolt into position.

STEP 7. Disconnect neutral safety switch on vehicles equipped with neutral safety switch mounted on the transmission by unplugging connector ends on wire harness. Allow connector ends to hang free.

STEP 8. Remove starter motor assembly and tie it up out of the way. On some vehicles, it is difficult to remove the starter completely, so it is easier to simply support it out of the way.

STEP 9. Support the transmission with a jack. Remove the transmission rear mount bolts. Raise the transmission slightly and remove the crossmember. Be sure the transmission jack supports the transmission on a wide area so you don't crush the oil pan.

STEP 10. Remove the bellhousing bolts. Lower transmission until the engine is supported. Pull transmission back slightly away from engine. Make sure converter stays with transmission. Lower transmission/converter assembly and remove from vehicle. **Caution: 4 Wheel Drive Vehicles:** Transmission/converter transfer case assembly is **heavy**. Exercise care during removal if your transfer case bolts to the transmission.

STEP 11. Pull converter off the front of the transmission. Some oil will leak out at this time. On C-4, C-6 and AOD transmission, the input shaft may pull out of the transmission when you remove the torque converter. Do not be alarmed.

C-4: Install the **short splined** end of the input shaft into the transmission until the splines engage the drum inside the transmission. Push the shaft in all the way until it stops.

C-6: Install the **long splined** end of the input shaft into the transmission until the splines engage the drum inside the transmission. Push the shaft in all the way until it stops.

Important C-4 ONLY: C-4 transmissions have either a 24T or 26T (Early & Late models) spline input shaft. Remove the input shaft and insert it into your B&M converter. Be sure that the input shaft engages the spline inside of the torque converter and is a good fit into the spline. Install input shaft into transmission as previously described.

STEP 12. Inspect your engine block and engine plate. Make sure there are no burrs that will prevent the transmission from bolting down flat against the engine. File off any burrs that may be present. Dowel pins should stick out of the engine block a **minimum** of 1/2" for proper alignment. (See Fig. 3) Insufficient dowel pin engagement can cause front seal and/or bushing failure due to improper engine/transmission alignment. **Bellhousing bolts alone will not align the transmission properly.**

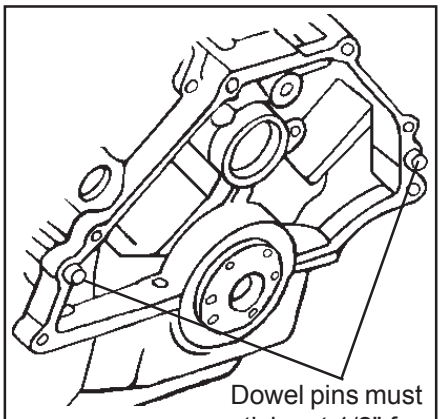

Figure 3

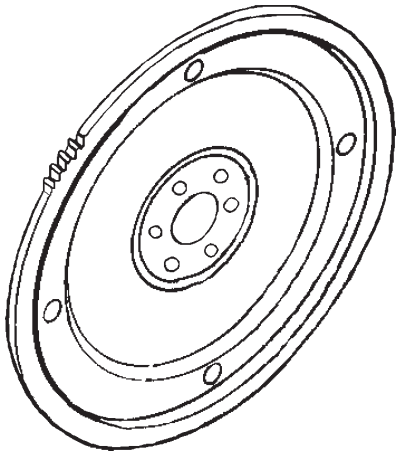

Inspect converter stud holes, crankshaft bolt holes and starter ring gear teeth for damage, cracks and excessive wear.

Figure 4

STEP 13. Inspect your flexplate. Check for distortion, excessive warpage or worn/elongated stud holes. (See Fig. 4) The flexplate should not be "dished" backwards. Check condition of starter ring gear teeth. Distorted or worn flexplates should be replaced.

STEP 14. Check the bolt pattern of your B&M torque converter and make sure it matches your flexplate. There are several bolt patterns possible from Ford Motor Company:

C-4: (4) 3/8" studs on 11.40" B.C.
(4) 3/8" studs on 10.50" B.C.
(4) 3/8" studs on 9.28" B.C.

C-6: (4) 3/8" studs on 11.40" B.C.
(4) 3/8" studs on 9.28" B.C.

FMX: (4) 3/8" studs on 11.40" B.C.
(4) 3/8" studs on 10.50" B.C.
(4) 3/8" studs on 9.28" B.C.

AOD: (4) 3/8" studs on 11.40" B.C.

If your flexplate does not match up to the bolt pattern on your B&M torque converter, you will have to replace your flexplate. You may enlarge your original flexplate holes to accept larger 7/16"-20 studs used on most B&M Performance coverters. Use a 15/32" (.468") dia. drill and deburr the holes after drilling.

B&M Converter Applications

Converter Part Number	B&M Converter	B&M Converter Bolt Pattern	Flexplate Modifications
40412 C-6	Holeshot 2400	3/8"-24 x 11.40" B.C.	Stock flexplate
40422 C-6	Holeshot 2400	7/16"-20 x 11.40" B.C.	Drill 15/32"
40427 C-6	TorkMaster 2000	7/16"-20 x 11.40" B.C.	Drill 15/32"
50412 C-4	Holeshot 2400	7/16"-20 x 10.50" B.C.	Drill 15/32"
50416 C-4	Holeshot 2400	7/16"-20 x 10.50" B.C.	Drill 15/32"
50441 C-4	TorkMaster 2400	7/16"-20 x 10.50" B.C.	Drill 15/32"
50442 C-4	TorkMaster 3000	7/16"-20 x 10.50" B.C.	Drill 15/32"
40437 AOD	TorkMaster 2000	3/8"-24 x 11.40" B.C.	Stock flexplate
40438 AOD	TorkMaster 2400	3/8"-24 x 11.40" B.C.	Stock flexplate
50402 AOD	Holeshot 2400	7/16"-20 x 11.40" B.C.	Drill 15/32"

Refer to the following chart for flexplate and starter nose-piece cross reference.

Stock Flexplate Flexplate	Replacement	Starter Nosepiece
C-4 Applications		
C5AZ-6375-T 11.40" bolt circle 164 tooth ring gear	Do not change	Use same starter nosepiece
D5ZZ-6375-A 9.28" bolt circle 141 tooth ring gear	C3AZ-6375-L 10.50" bolt circle 157 tooth ring gear	D1AZ-11130-A
C-6 Applications		
D1ZZ-6375-C 9.28" bolt circle 164 tooth ring gear	D1ZZ-6375-A 11.40" bolt circle 164 tooth ring gear	Use same starter nosepiece
AOD Applications		
Use same flexplate		

Factory part numbers are for reference only, and are not guaranteed for accuracy.
Make sure that the replacement flexplate has an equivalent balance weight on it. Improper flexplate balance will cause severe **engine vibration**.

Note: C-4 transmission bellhousings have two different mounting designs.

1. Flared case: The bellhousing bolts directly to the transmission case with 5 bolts and the oil pump bolts are separate. (See Fig. 5) The case flares out to meet the bellhousing.

2. Pump Mount: The bellhousing bolts to the transmission with the same bolts that hold the oil pump. (See Fig. 6) There is a 1/4" gap between the case and the bellhousing.

Caution: Do not use a 10.50" bolt circle torque converter with a flared case bellhousing C-4. Do not use an 11.40" bolt circle converter with Pump Mount bellhousing C-4. Improper pilot hub or oil pump engagement will result which could damage the transmission and/or torque converter.

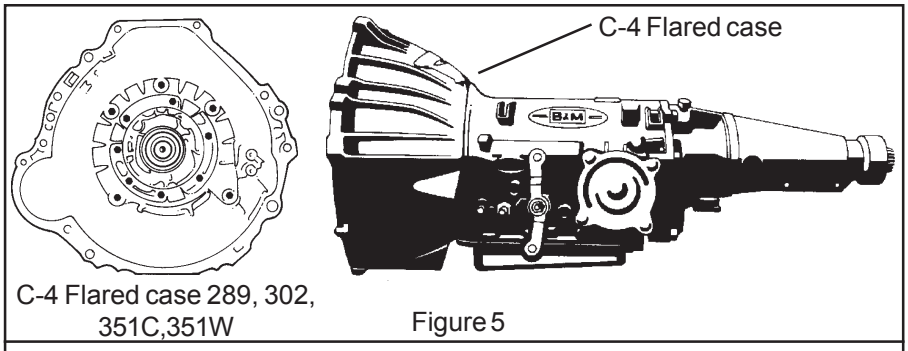

C-4 Flared case 289, 302, 351C,351W

Figure 5

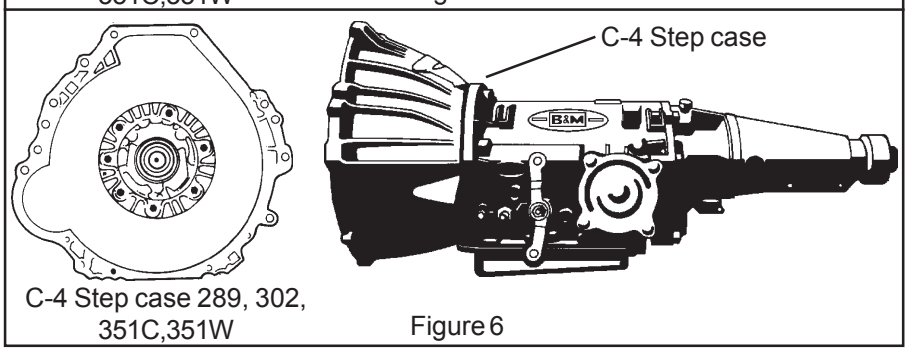

C-4 Step case 289, 302, 351C,351W

Figure 6

STEP 14. Install flexplate onto crankshaft if you have removed or replaced it. When properly installed, the raised inner lip on the flexplate crankshaft diameter is **away from the crankshaft.** Install flexplate to crankshaft bolts and torque to 55 lb. ft.

STEP 15. Install B&M torque converter against crankshaft and flexplate. The converter should fit the crank snugly with no excessive slop. A tight fit may indicate burrs or rust in the pilot diameter of the crank. This can be cleaned with some emery paper or a file. If your flexplate is new or in good condition the converter may not contact the flexplate before it bottoms in the crankshaft. A 1/16 - 1/8" gap is normal. When the flexplate to converter bolts are tightened the flexplate will bow backwards slightly and hold the torque converter against the crankshaft. Make sure flexplate clears any drain plugs on converter.

STEP 16. Remove the front pump seal in the transmission and replace with the new seal supplied with the converter. Lubricate the seal with ATF or white grease. Pour one quart of B&M Trick Shift ATF into the B&M torque converter so there will be some lubrication on initial start-up. While Trick Shift is superior in lubrication, heat capacity and friction material performance, if Trick Shift is unavailable be sure to use Ford Type F fluid.

STEP 17. Install B&M torque converter onto transmission. Push and rotate converter to engage input shaft, stator shaft and oil pump rotors. Place a straightedge across the face of the transmission bellhousing. Measure the distance from the face of the bellhousing to the base of the torque converter drive stud. (See Fig. 7) The base of the stud must be at least **13/16" (4 cyl-351 V-8) or 1-1/8" (360 Larger-V-8) inside the bellhousing.** A measurement of less than 13/16" (4 cyl-351 V-8) or 1-1/8" (360-Larger V-8) indicates the torque converter is not fully engaged in the transmission, except torque converters specially built for motor plate applications. (Subtract the thickness of your motor plate from the 13/16" or 1-1/8" dimension for proper measurement.) Continue to rotate and turn the converter to obtain full engagement. **If you install the transmission without full converter engagement, you will damage the oil pump and/or converter.**

STEP 18. Place transmission in position on transmission jack. Be sure the jack supports the transmission on a wide area so you don't crush the pan. Align converter drive studs with holes in flexplate. Install transmission/torque converter against engine. Transmission should engage dowel pins and sit flat against the engine block with hand pressure only. If the transmission will not sit flat against the engine, the converter is not installed into the transmission all the way or there is some interference problem. **Do not attempt to pull the transmission up against the engine with the bellhousing bolts as this can cause transmission and/or torque converter damage.**

STEP 19. Once the transmission is in position against the engine, install transmission bellhousing bolts and tighten 25-30 lb.ft. At this point, the torque converter should be free to move back and forth slightly. A tight converter indicates improper pump engagement, badly burred crankshaft, distorted flexplate or flexplate stud holes not drilled to size. **This condition must be corrected before going any further.**

STEP 20. Inspect rubber transmission mount. Worn, cracked or oil soaked transmission and/or engine mounts should be replaced. Raise transmission and install crossmember and transmission mount bolts securely. Install starter motor in place. Install starter bolts and tighten securely. Connect neutral safety switch on vehicles with switch mounted on transmission.

STEP 21. Install four flexplate to converter nuts. Use the starter motor to "bump" each stud into position. Tighten nuts:

3/8" - 24	23 - 28 lb.ft.
7/16" - 20	26 - 32 lb.ft.

Install converter access cover and tighten bolts 30-60 lb.in.

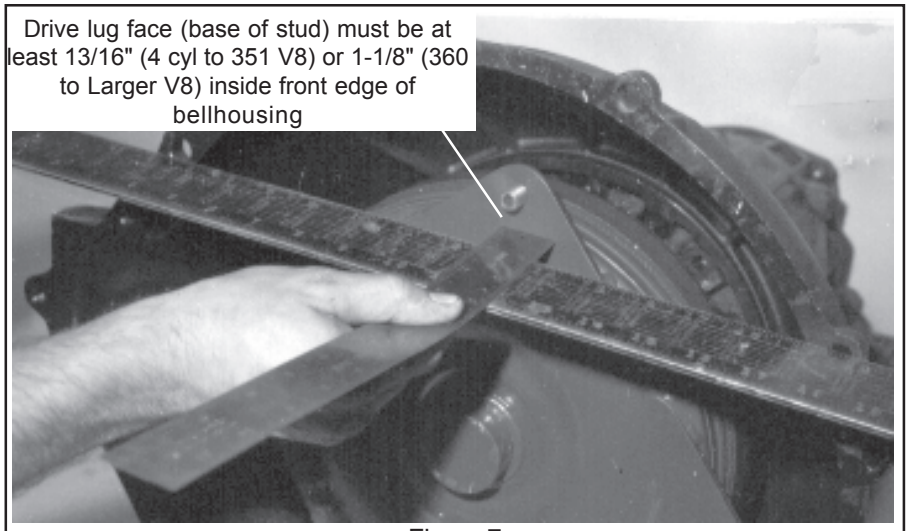

Figure 7

STEP 22. Install dipstick and tube assembly. Use a small amount of sealer on dipsticks with an O-ring to prevent leaks. Connect oil cooler lines. Use a fitting wrench on the compression nuts to avoid damage to the nuts and hold the fittings with a wrench while tightening compression nuts 75 lb.in.

STEP 23. Connect speedometer cable:

Clamp Type Cable: Use a small amount of sealer on the O-ring to prevent leaks. Push speedometer cable assembly into extension housing. Install clamp bolt and tighten to 150 lb.in.

Sleeve Type Cable: Push speedometer cable into speedometer housing and tighten sleeve.

STEP 24. Connect shifter:

Column Shift Models: Connect rod or cable to shift lever on transmission. (See Fig. 1) Snap rod into grommet retainers by squeezing rod and lever together with a pair of pliers. Connect rod or cable to clip retainer levers and install clip.

Console Shift Models: Connect rod to shift lever on transmission. (See Fig. 2) Snap rod into grommet retainers by squeezing rod and lever together with a pair of pliers. Connect rod to clip retainer levers and install clip.

'70 and Later Vehicles Equipped With Locking Steering Column And Console Shifter: Connect column lock rod to transmission shift lever and install clip. Check shifter adjustment. Selector lever must coincide with detent feel in transmission. There must be equal clearance between the **Neutral** stop and detent position and the **Drive** stop and detent position.

4 Wheel Drive Models: Install knob on transfer case shift lever.

STEP 25. Connect kickdown linkage. (See Fig. 1 & 2) Connect rod or cable kickdown lever and install clip. Kickdown linkage should work smoothly with a positive spring return action.

STEP 26. Inspect vacuum line. Replace any vacuum lines that are broken, cracked, kinked or restricted. Vacuum source should be from the manifold for proper vacuum sensing to automatic valve bodies.

STEP 27. Install driveshaft. Make sure U-joint cups are installed properly. Tighten U-joint bolts or nuts securely.

STEP 28. Lower vehicle but keep the rear wheels off the ground if possible. Add 3 quarts (C-4), 4 quarts (FMX) or 6 quarts (C-6 or AOD) of B&M Trick Shift to the transmission. While Trick Shift is superior in heat capacity, lubrication and friction material performance, if Trick Shift is unavailable be sure to use Ford Type F fluid.

STEP 29. Start engine and place shifter in the **Neutral** position. Add fluid until the oil level is between the **Add** and **Full** marks. Shift transmission through all gear positions. If the rear wheels are off the ground, allow the transmission to shift through all gears several times. Place selector in **Neutral** and check fluid level. **Do not overfill.** This can cause foaming and overheating. Check for leaks at cooler lines, etc.

OPERATING RECOMMENDATIONS

Torque Converter Performance

The torque converter is a component of the automatic transmission however it must be properly matched to the engine for maximum performance.

A torque converter reacts to torque. The more torque you put to the converter the better your performance. However this torque must match the operating RPM of the converter. To make a converter operate properly, your engine must make sufficient **bottom-end torque.** You cannot build an engine for an automatic transmission the same way you would build an engine for a 4-speed because the operating ranges are different . Your engine must be built to produce as much **bottom-end** and **mid-range torque** possible for your operating conditions. This is especially important for good street performance.

Do not make the mistake of over-camming your engine. You will need to limit camshaft duration to **245° @ .050** for street engines. We also suggest you run the cam 2°-4° advanced. Small CFM carburetors give better bottom-end response. Be careful not to over carburete your engine.

Approximate stall speed of B&M torque converters is indicated by the B&M model. For example, a **Holeshot 3000** has a stall speed of approximately 3000 RPM. This is a general guide and should be used for reference only. Exact stall speeds are impossible to predict. A specific stall speed cannot be guaranteed due to the many variables involved in each car. If you are experiencing stall speed difficulties, the following items can contribute to low stall speeds:

- Light cars
- Small displacement engines
- Very high compression ratios
- Large throttle bore carburetors
- Mechanical carburetor secondary linkage
- Long duration camshafts
- Retarded cam timing
- Poor rear brakes
- High-ram manifolds
- Multiple carburetion

Low stall speeds, poor throttle response, sluggish performance and

high idle speed requirements indicate poor bottom-end torque characteristics which will need to be corrected to obtain maximum converter performance.

Modified torque converters are installed to improve performance and durability not available from a stock torque converter. Heavy Duty and racing applications impose higher loads and greater heat dissipation than stock operating conditions.

Oil Cooling: The factory heat exchanger is usually inadequate for Heavy Duty and/or Racing applications. The following B&M Oil Coolers are recommended for performance applications. Heat is the major enemy of automatic transmissions and a cooler will also prolong the life of your transmission. B&M will not warranty torque converters which show heat damage from misuse or inadequate cooling.

B&M Part No.	Rating/Application
70255	16,000 GVW Street perfomance
70268	19,000 GVW Campers, small motor homes, high stall converters
70264	24,000 GVW Large motor homes, towing, high stall converters
70266	28,000 GVW Road & off-road race cars (high flow race cooler)

Driving Techniques:

Traveler:

Traveler torque converters should be driven like a stock torque converter. Stall speeds and converter slip will coincide with torque demand and adjust automatically. Additional deceleration will be noticed during manual downshifts.

Holeshot and TorkMaster:

Holeshot and TorkMaster torque converters are designed for street performance and should not be considered as a low cost race converter. Under normal driving conditions Holeshot and TorkMaster torque converters will function like stock converters with some additional slip. High stall speeds are available at torque demand. The best standing start acceleration performance is usually obtained by "stalling" the converter at 1500-2000 rpm with the brakes locked just prior to launching the car. Bang the throttle and release the brake pedal at the instant of launch. Marginal traction situations may require you to "drive the car out" or feel for traction with the gas pedal as you leave the starting line. Remember, Holeshot and TorkMaster torque converters are designed for street performance and occasional drag strip use. **Race cars** need **Race** converters.

Maintenance:

Street Use: Change fluid and filter every 10,000 - 12,000 miles. This will also help the life of the transmission. Check torque converter bolts or nuts every 20,000 - 24,000 miles.

Ballooning: Ballooning is expansion of the torque converter along the axis of rotation (front to back). This is caused by high rpm use and/or continuous wide open throttle stall speeds. A ballooned converter can lose thrust washer piloting and must be cut open for repair. You can check for ballooning by measuring the end play clearance of the stator and turbine. (See Fig. 8) You will have to make a hooked tool to grab the stator or turbine. (See Fig. 9) Maximum stator or turbine end play is .050 inch. If stator or turbine end play exceeds .050 inch the converter will have to be cut open to repair the cover.

Cracks and Leaks:

Leaks can be caused by several reasons. The most common are front seal failure and vibration cracks.

Front seal failure is due to improperly installed seal (damaged during installation), misalignment, worn pump bushing, or worn converter impeller hub. A ballooned converter can have a slightly bent impeller hub. Inspect the pump bushing when you replace the seal. Check dowel pins in the engine block for sufficient engagement and polish the converter impeller hub with 400 grit wet and dry sandpaper and oil.

Cracks can develop in the impeller hub or perimeter weld from stress and vibration. If a crack occurs around the impeller or pilot hub we recommend you return it for repair.

Figure 8

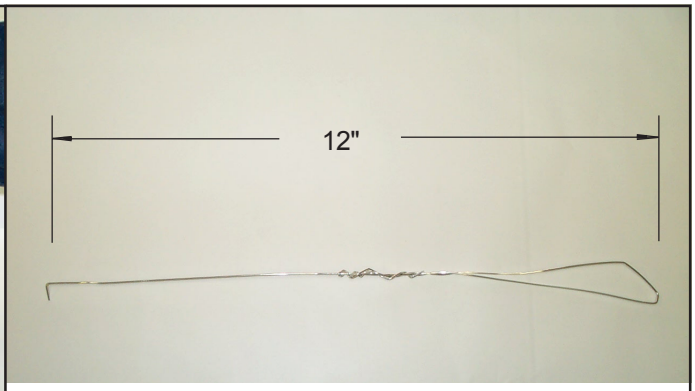

Typical homemade tool used to check torque converter end play

Figure 9