FITTING AND TUNING

BOLT ON FILTER UNITS

Remove the original air filter box. In most cases you should have disconnected a large bore breather pipe (12mm ID to 20mm ID) and probably a small bore pipe (3mm ID) from an outlet on the carburettor or manifold.

Block off the small bore with a rubber plug or tape. The large bore breather hose can be fitted into the base of the filter using angled T. piece (available from K&N dealers). Alternatively, the rubber hose can be held firmly in the filter base by drilling a hole 2mm smaller than the hose.

A new system is now available for breather systems, see drawing B. Vent adapters can be purchased from K&N dealers in various outlet sizes, these fit easily between the top and bottom stainless steel plates.

Take care not to remove the small bore pipe leading to the distributor.

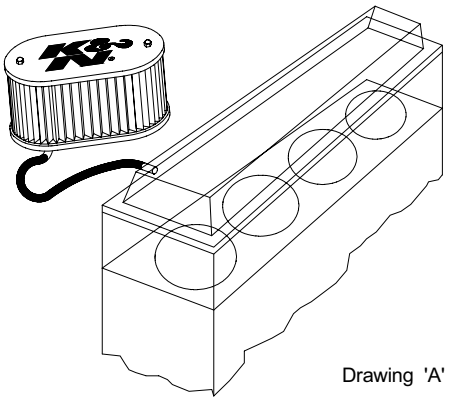

Drawing 'A'

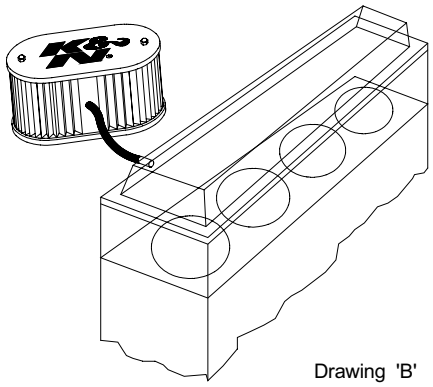

Drawing 'B'

MIXTURE ADJUSTMENTS

Removing the standard air filter case generally increases air flow. Many models may only need an adjustment of the mixture screw, and resetting idle speed.

Twin Choke Carburettors.
If top end is poor i.e. weak.

If part throttle cruising and progression is poor.

Single Choke Carburettors.
If part throttle cruising and progression is poor.

If progression is good, but top end is poor.

SU Carburettors.
An adjustment of the main jet nut may be sufficient.

HIF type carburettors. Screw on side of carb.

Some models may need a needle change.

Note. If SU's have old needles and jets fitted, i.e. worn, don't replace yet, this wear may supply the increase in fuel needed.

Most modern engines run very lean, noticeably on progression. A rolling road session is always worthwhile helping you to get the best from your free flowing K&N Filter, especially when additional modifications (camshafts, exhaust systems etc) have been carried out.

If possible check CO figure at idle.

Set at maximum figure + 0.5% if required.

Try 5 up on secondary main jet.

Try 5 up on primary main jet, e.g. 120 to 125.

Try 5 up on main jet , e.g. 110 to 115.

Try 5 down on air corrector jet, e.g. 135 to 130.

Turn down 3 flats. Maximum.

Small adjustments, try 15 minutes in.
If possible check CO at idle. Set at max. + 0.5%.

2 . REPLACEMENT ELEMENTS.

Mixture Adjustments.

Most models will run without any adjustments but it is always advisable to carry out a simple CO check at idle as your car may have the CO As a guideline, set the CO at maximum or maximum + 0.5% if this is required. The above applies to carburetted, injected and turbo engines.