PAINLESS PERFORMANCE PRODUCTS®

Wire Harness Installation Instructions

For Installing:

#10123 Customizable Ford Color Coded Harness 21 Circuit

Manual #90545

Painless Performance Products, LLC

2501 Ludelle Street
Fort Worth, TX 76105-1036
800-423-9696 phone – 817-244-4024 fax
Web Site: www.painlessperformance.com
E-Mail: painless@painlessperformance.com

If you have any questions concerning the installation of this product, feel free to call **Painless Performance Products**' tech line at 1-800-423-9696. Calls are answered from 8am to 5pm central time, Monday thru Thursday, 8am-4:30pm Friday, except holidays.

Here we have provided you with accurate instructions for the installation of this product. However, if you have comments/suggestions concerning these instructions, please call or email us (our contact information can be found at the top of this page or online at **www.painlessperformance.com**).We sincerely appreciate your business.

Painless Performance Products, LLC shall in no event be liable in contract or tort (including negligence) for special, indirect, incidental, or consequential damages, such as but not limited to, loss of property, or any other damages, costs or expenses which might be claimed as the result of the use or failure of the goods sold hereby, except only the cost of repair or replacement.

Should you damage or lose part of your manual, a full color copy of these instructions can be found online at www.painlessperformance.com

Installation Manual: **90545**

1ST Edition: January 14, 2014

Copyright © 2006 by Painless Performance Products, LLC

NOTE :

If your vehicle has an existing harness, you will want to retain it for the possible re-use of various Pigtails & Connector housings, particular to your application.

If you do not have an existing harness, there is a package of terminals included with the harness that will enable you to make most of the connections needed. Replacement lighting pigtails & sockets can be readily obtained from your local parts distributor

TABLE OF CONTENTS

List of Figures..... 3
List of Tables..... 4
List of Diagrams..... 4

1.0 Introduction..... 4
2.0 About These Instructions..... 5
3.0 Contents Of The Painless Wire Harness Kit..... 5
4.0 Tools Needed..... 6
5.0 Pre-Installation and General Harness Routing Guidelines..... 6
6.0 Harness General Installation Instructions..... 7
6.1 Rough Installation..... 7
6.2 Harness Attachment..... 7
6.3 Grounding the Automobile..... 8
6.4 Terminal Installation and Making Connections..... 8
6.5 Testing the System..... 8
7.0 Specific Circuit Connections..... 9
7.1 Ford Alternator..... 9
7.2 Ford Ignition (Start/Run) System..... 10
7.3 Steering Column Wiring - Turn Signal Connections..... 11
7.4 Steering Column Wiring - Ignition Switch Connections..... 12
8.0 All Makes - Specific Circuit Connections..... 14
8.1 Connecting to Ammeter and the Maxi-Fuse..... 14
8.2 Interior Lighting..... 14
8.3 Headlight Section "A"..... 16
8.4 Headlight Section "B" and Hazard..... 17
8.5 Instrument Panel Wiring..... 17
8.6 Brake Light Switch..... 18
8.7 Tail Section Wiring..... 18
8.8 Helpful Hints for Tail Section Wiring..... 19
9.0 Wire Connection Index 19

LIST OF FIGURES

Figure 3.1 Painless Harness Kit..... 5
Figure 6.2 Fuse Block Mounting..... 7
Figure 7.1A Ford Alternator..... 9
Figure 7.1B High Output Wire..... 9
Figure 7.1C Internal Regulator Alternator..... 10
Figure 7.1D 3G Alternator..... 10
Figure 7.2A Ford Ignition (Start/Run) System..... 11
Figure 7.2B Ford Electronic Ignition 13
Figure 7.2c Ford Duraspark II..... 13
Figure 8.1 Ammeter and Maxi-Fuse..... 14
Figure 8.2 Interior Lighting..... 15
Figure 8.3A Headlight Section "A" Wiring..... 15
Figure 8.3B Dual Head Lamp Connections..... 16
Figure 8.3C Typical Fan Relay Installation..... 17
Figure 8.3D Dimmer Switches..... 17
Figure 8.7A Integrated Brake Light and 18
Figure 8.7b Separate Turn/Brake Lights 19
Figure 9.1 Fuse Requirements..... 22

LIST OF TABLES

Table 7-1 Ford Ignition and Turn Signal Wiring 12
Table 8-1 Headlight/Hazard Switch Connections 17
Table 9-1 Wire Connection Index (1 of 3)..... 21
Table 9-1 Wire Connection Index (2 of 3)..... 22
Table 9-1 Wire Connection Index (3 of 3)..... 23

LIST OF DIAGRAMS

Diagram 1 Instrument Panel Section Wiring..... 24
Diagram 2 Engine Wiring..... 25

1.0 INTRODUCTION

You have purchased what we at Painless Performance Products believe to be the most up-to-date and easiest-to-install automotive wire harness on the market. It is designed for easy installation, even if you have no electrical experience.

All kits have a built-in-anti-theft feature. Removing the fuse labeled "coil" from the fuse block will prevent the vehicle from starting.

The proper fuses have been pre-installed in the fuse block. In addition, all wires are color-coded. This will help you identify the different circuits during installation and later on if additions to the overall system are necessary. For fuse specifications and wire color designations, see **Section 9.0**.

All wire is 600 volt, 125°c, TXL. Standard automotive wire is GPT, 300 volt, 80°c, with PVC insulation.

This complete automobile wiring system has been designed with three major groups incorporated into it:

ENGINE/HEADLIGHT GROUP

Includes high beam, low beam, park, right turn, left turn, electric fan, horn, starter solenoid and battery feed, alternator and alternator exciter wire, distributor, water temperature, oil pressure, and air conditioning.

DASH GROUP

Includes wires to connect gauges, indicator lights, and switches to their proper sources.

REAR LIGHT GROUP

Includes tail lights, dome lights (see Paragraph 8.4.2), left and right turn signals, brake lights, and fuel sender.

Installation requires four (4) easy steps:

1. Mount the fuse block
2. Route the wires
3. Cut off the excess wire
4. Terminate the wires

2.0 ABOUT THESE INSTRUCTIONS

The contents of these instructions are divided into major **Sections**, as follows:

1.0 Introduction
2.0 About These Instructions
3.0 Contents of Painless Wire Harness Kit
4.0 Tools Needed
5.0 Pre-Installation and General Harness Routing Guidelines
6.0 General Harness Installation Instructions
7.0 Specific Circuit Connection Details
8.0 All Makes - Specific Circuit Connection Details
9.0 Wire Connection Index and Fuse Requirements

Sections are divided into subsections and **Paragraphs**. Throughout these instructions, the **Figure** numbers refer to illustrations and the **Table** numbers refer to information in table form. These are located in Sections or Paragraphs corresponding to the number. Always pay special and careful attention to any *Notes*, especially those in the Tables, and any text marked ***Caution***.

3.0 CONTENTS OF THE PAINLESS WIRE HARNESS KIT

Refer to **Figure 3-1** to take inventory. See that you have everything you're supposed to have in this kit. If anything is missing, contact the dealer where you obtained the kit or Painless Performance at (800) 423-9696. The Painless Wire Harness Kit should contain the following items:

The Main Wire Harness, with the Fuse Block wired in and fuses installed.
This booklet, P/N 90545 Painless Wiring Manual.
Headlamp Connector Cables. (Extra Headlamp Cables are available separately under P/N 80300.)
High Amp Alternator Wire kit
Firewall Grommet (large)
2 Fender Well Grommets (for Headlamps)
2 packages of Nylon Tie Wraps
Parts kits, containing Terminals, Splices, Alternator Regulator Connector, etc. and Maxi Fuse
Rolled Wire (Starter Relay and Alternator Regulator)

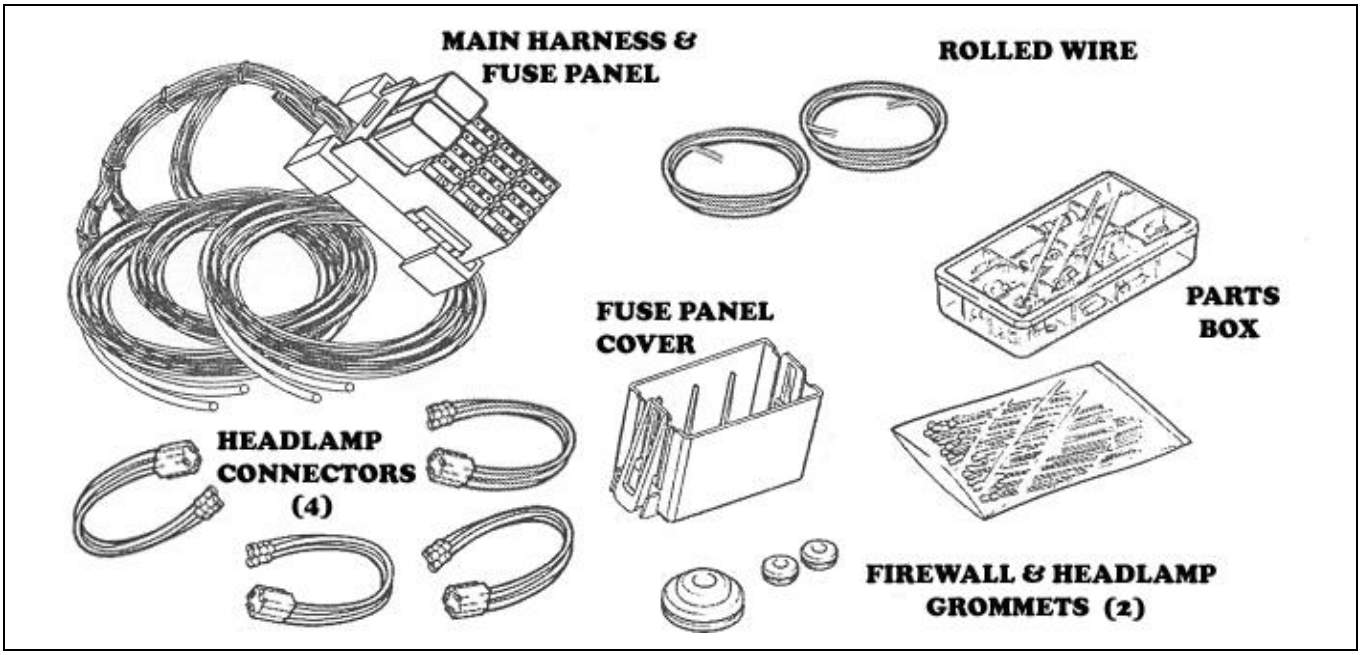

Figure 3-1 Painless Wire Harness Kit

4.0 TOOLS NEEDED

In addition to your regular tools, you will need, at least, the following tools:

Crimping Tool *Note: Use a quality tool to avoid over-crimping.*
Wire Stripper
Test Light or Volt Meter
Electric Drill
1-1/4" Hole Saw
Small (10 amp or less) Battery Charger

5.0 PRE-INSTALLATION AND GENERAL HARNESS ROUTING GUIDELINES

The installation of your wire harness mainly consists in two parts:

- The physical routing and securing of the wire harness, wires, and groups.
- The proper connection of the individual circuits.

These two major tasks are not separate steps, but are integrated together. That is, you will route some wires and make some connections, route some more wire and make some more connections.

We cannot tell you how to physically route the harness in your automobile. That depends a great deal upon the particular make/model of automobile and to what extent you want to secure and conceal the harness. We do offer some general guidelines and routing practices starting in **Section 5.2**, GENERAL installation instructions in **Section 6.0**, and precise instructions concerning the electrical connections you will have to make in beginning in **Section 7.0**. To help you begin thinking through the installation of your wire harness, read the following sections:

5.1 Familiarize yourself with the harness by locating each of the harness sections in the following list. (Whenever a particular harness section is referred to in these instructions it is shown "all caps": ENGINE SECTION A)

ACCESSORY SECTION SWITCHES	TURN SIGNAL SECTION
ACCESSORY SECTION B+	HEADLIGHT SECTION A
DIMMER SWITCH SECTION	HEADLIGHT SECTION B
ENGINE SECTION	IGNITION SWITCH SECTION
ENGINE SECTION A (Single, 10 ga. red wire)	INSTRUMENT PANEL SECTION
ENGINE SECTION A	RADIO SECTION
TAIL SECTION	HAZARD SWITCH SECTION
DOOR SWITCH SECTIONS	COURTESY LIGHT SECTION

*Note: For complete information concerning the individual circuits and wires that make up the harness SECTIONS, see **Section 9.0**.*

5.2 Decide where the fuse block will be mounted. The Painless Wire Harness is designed for the fuse block to be mounted on the driver's side, under the dash.

5.3 Decide which of the following circuits you will be using in your system and where the harness groups or wires will be routed:

Emergency Flashers	
Horn	
Dome Lights	
Lights	
Air Conditioner	
Electric Cooling Fan	
Coil	
Turn Signals	
Radio Ignition Switched Power	
Radio Constant Power	
Gauges	
Accessories	

5.4 Where will the following harness groups be routed?

Headlights	
Engine	
Dash	
Tail Lights	

5.5 A good exercise is to lay out the wire harness on the floor beside your automobile and identify all the SECTIONS. You will want to route the harness through and around open areas. Inside edges provide protection from hazards and also provide places for tie wraps, clips and other support.

5.6 Route the harness away from sharp edges, exhaust pipes, and hood, trunk and door hinges.

5.7 Plan where harness supports will be located. Allow enough slack at places where movement could occur (body to frame, frame to engine, etc.). Use a support every 12 inches unless the harness routes under the floor carpet.

5.8 At wire ends don't depend on the terminals to support the harness. The weight of the harness could cause terminals to disconnect or copper wire strands to break.

5.9 The wires should be bundled into groups. Use nylon ties, poly split loom, or tape.

6.0 HARNESS GENERAL INSTALLATION INSTRUCTIONS

6.1 Rough Installation

CAUTION: DISCONNECT THE POWER FROM YOUR VEHICLE BY REMOVING THE NEGATIVE (BLACK) BATTERY CABLE FROM THE BATTERY.

Note: Make no wire connections or permanent mounting of any kind at this time!

6.1.1 Position the fuse block in its mounting area.

6.1.2 Drill a 1-1/4" (1.25") hole near the fuse block for engine and headlight group wires to pass through (ENGINE SECTION, ENGINE SECTION A, SINGLE 10 GA. (BK/YL wire #916), and HEADLIGHT SECTION A).

6.1.3 Install the Firewall grommet. Route engine and headlight group wires through the grommet and position the harness groups in the areas decided upon in **Sections 5.3** and **5.1**.

6.1.4 Route dash group (ACCESSORY SECTION B+, ACCESSORY SECTION SWITCHES, HEADLIGHT SECTION B, INSTRUMENT PANEL SECTION and RADIO SECTION) upward to rear of dash and temporarily tie in place.

6.1.5 Position rear group, consisting of the TAIL SECTION, on floor pan area decided upon in **Sections 5.3** and **5.4**.

6.2 Harness Attachment

Note: Harness routing and shaping is and should be a time-consuming task. Taking your time will enhance the beauty of your installation. Please be patient and TAKE YOUR TIME!

6.2.1 Mount the base of the fuse block with the two self tapping screws from the parts kit. Snap the fuse block into place once the base is mounted (Note: The fuse block itself does not have to be grounded.)

Figure 6-2 Fuse Block Base Mounting

6.2.3 Mold harness groups to the contour of floor pan, firewall, fender panels, and any other area where wires or harness groups are routed. Remember to route the harness away from sharp edges, exhaust pipes, hood, trunk and door hinges, etc.

6.2.4 Attach harness groups to your automobile with clips or ties starting at the fuse block and working toward the rubber grommet for the front groups and along the floor pan for the rear group. The dash wires should be routed out of the way of any under-dash obstacles, such as cowl vent, air conditioning, radio, etc.
Note: Do not tighten tie wraps and mounting devices at this time. Make all harness attachments LOOSELY.

6.2.5 When used every 1-1/2" or so on the visible areas of the harness, the plastic wire ties make a very attractive assembly. A tie installed in other areas every 6" or so will hold the wires in place nicely. Remember to take your time!

6.3 Grounding the Automobile

A perfectly and beautifully wired automobile will nevertheless have bugs and problems if everything is not properly grounded. Do not go to the careful effort of installing a quality wire harness only to neglect proper grounding.

Note: The Painless Wire Harness Kit includes no ground wire except the black wire from the two headlamp connectors. You must supply ground wire (14-16 gauge) for all circuits.

6.3.5 Connect a Ground Strap or Cable (minimum of 2 gauge) from the Negative Battery terminal to the engine block.

6.3.6 Connect a Ground Strap from the Engine to the chassis**. DO NOT RELY UPON THE MOTOR MOUNTS TO MAKE THIS CONNECTION**.

6.3.7 Connect a Ground Strap from the Engine to the Body.

6.3.8 If you have a fiberglass body you should install a terminal block to ground all your Gauges and Accessories. Ground the Terminal Block with at least a 12-gauge wire to the chassis.

6.4 Terminal Installation and Making Connections

*Note: In the following steps you will be making the circuit connections. Before you start, you should carefully read **Sections 7.0** through **8.0**, as appropriate, and continually refer to **Section 9.0**, DOUBLE-CHECKING your routing and length calculations before cutting any wires and making connections. Give special attention to Turn Signal and Ignition Switch connections. These can be somewhat confusing.*

6.4.5 Have all needed tools and connectors handy.
6.4.6 Select the correct size terminal for the wire and stud application.
6.4.7 Determine the correct wire length and cut the wire. Remember to allow enough slack in the harness and wires at places where movement could possibly occur, such as automobile body to frame, frame to engine, etc. **Double-check your calculations.**
6.4.8 Strip insulation away from wire. Strip only enough necessary for the type of terminal lug you are using.

Note: In the following step, make sure that the terminal is crimped with the proper die in the crimping tool. An improper crimp will NOT make a good connection. ***CAUTION: DO NOT OVER-CRIMP!***

6.4.9 Crimp the terminal onto the wire.
6.4.10 Connecting the harness throughout the groups is a redundant process. Make sure that each wire is FIRST properly routed and THEN attach. **DO NOT** ATTACH FIRST THEN ROUTE AFTERWARD.
6.4.11 When all wires are attached, tighten the mounts and ties to secure harness permanently.

6.5 Testing The System

6.5.1 Use a small (10 amp or less) battery charger to power up the vehicle for circuit testing. If there is a problem anywhere, the battery charger's low amperage and internal circuit breaker will provide circuit protection.

CAUTION: IF YOU HAVE NOT YET DISCONNECTED THE BATTERY FROM THE AUTOMOBILE, DO SO NOW! DO NOT CONNECT THE BATTERY CHARGER WITH THE BATTERY CONNECTED.

Connect the battery charger's NEGATIVE output to the automobile chassis or engine block and its POSITIVE output to the automobile's positive battery terminal.

6.5.2 INDIVIDUALLY turn on each light, ignition, wiper circuit, etc. and check for proper operation.

Note: The turn signals will not flash properly if you do not have both the front and rear bulbs installed and connected.

6.5.3 When all circuits check out THEN attach the battery cable to the battery for vehicle operation.

7 SPECIFIC CIRCUIT CONNECTIONS

7.1 Ford Alternator (2 configurations). See Figure 7-1.

Note: Your Alternator may not appear exactly as represented in ***Figure 7-1****. The circuits are wired the same way, though.*

7.1.1 Wires **#**996, #997, #998 are all located in the same group of rolled wire labeled "Alt. Regulator".
7.1.2 Connect <u>ENGINE SECTION</u> wire #914 (GN/RD) to the Alternator Regulator (I) terminal.

CAUTION: IF USING AN ALTERNATOR WITH AN OUTPUT LARGER THAN 65 AMPS, YOU WILL ALSO NEED TO USE JUMPER WIRE #960 (RED), INCLUDED WITH THIS KIT. THE WIRE END WITH THE RING TERMINAL AND RUBBER BOOT WILL CONNECT TO THE ALTERNATOR OUTPUT LUG. ROUTE THE OTHER END TO THE STARTER RELAY. CUT THE WIRE AND CRIMP ON A RING TERMINAL. INSTALL ON RELAY TERMINAL WITH CABLE COMING FROM BATTERY. SEE FIGURE 7-1B.

7.1.3 Connect <u>ENGINE SECTION</u> wire #999 to the Alternator Regulator A terminal, this splices with wire #915. Connect wire #915 (BK/YL) to the Alternator Output lug (Bat).
7.1.4 Connect wire #997 from the Alternator Regulator S terminal to the Alternator Stator (S) terminal. Connect wire #996 from the Alternator Regulator F terminal to the Alternator Field (F) terminal.
7.1.5 Use wire #998 to supply grounds to the Alternator Ground lug and to the Alternator Regulator ground.
7.1.6 A connector and terminals to attach these wires to the regulator is supplied and located in its own parts bag. Check all lengths before terminating any wire.

7.1.7 An alternate (and less-used) method is to omit the Alternator Stator wire, install a 14-gauge jumper across Voltage Regulator terminals A & S, and connect wire #914 to either the A or S terminal of the Voltage Regulator. The FIELD wire and wire #915 are connected as above. Do **NOT** connect wire #999 as in **Paragraph 7.1.3**. Make certain this wire is safely insulated and stowed; it is an **unprotected** battery hot wire. The Voltage Regulator Ignition (I) terminal is not connected. Install ground wires as in **Paragraph 7.1.5**. This alternate configuration is illustrated in dashed lines in **Figure 7-1A**.

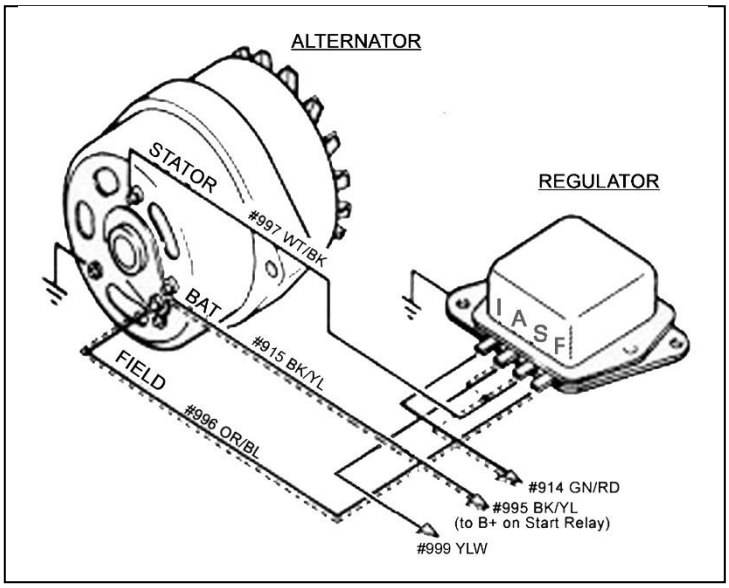

Figure 7-1A Ford Alternator (2 Configurations)

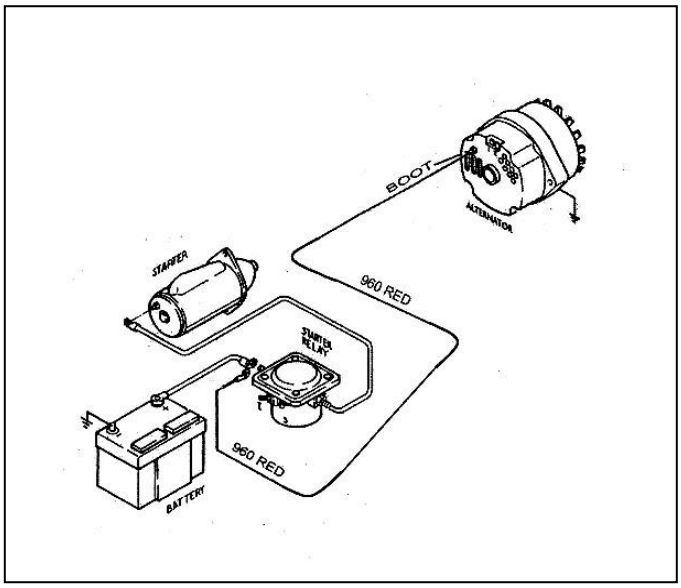

Figure 7-1B High Output Wire

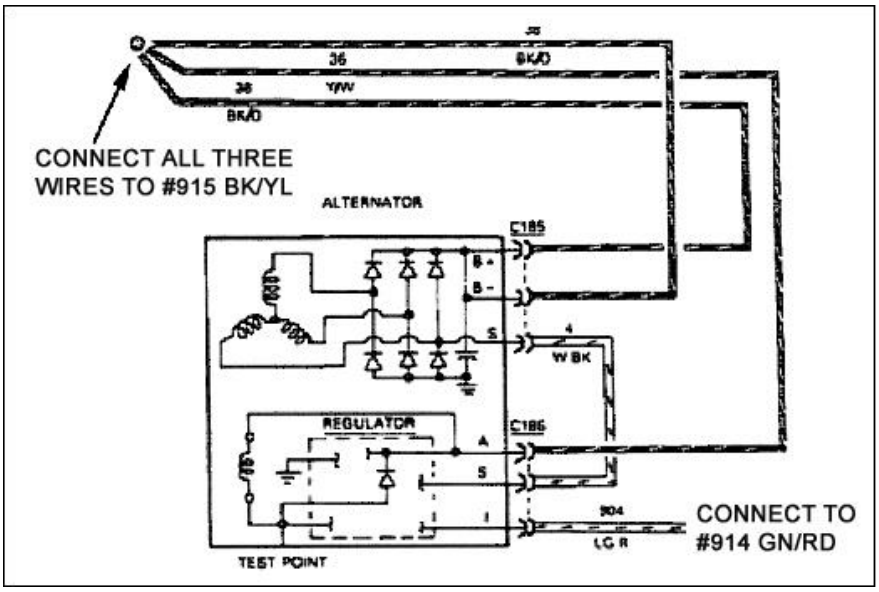

Figure 7-1C Ford Internal Regulator Alternator

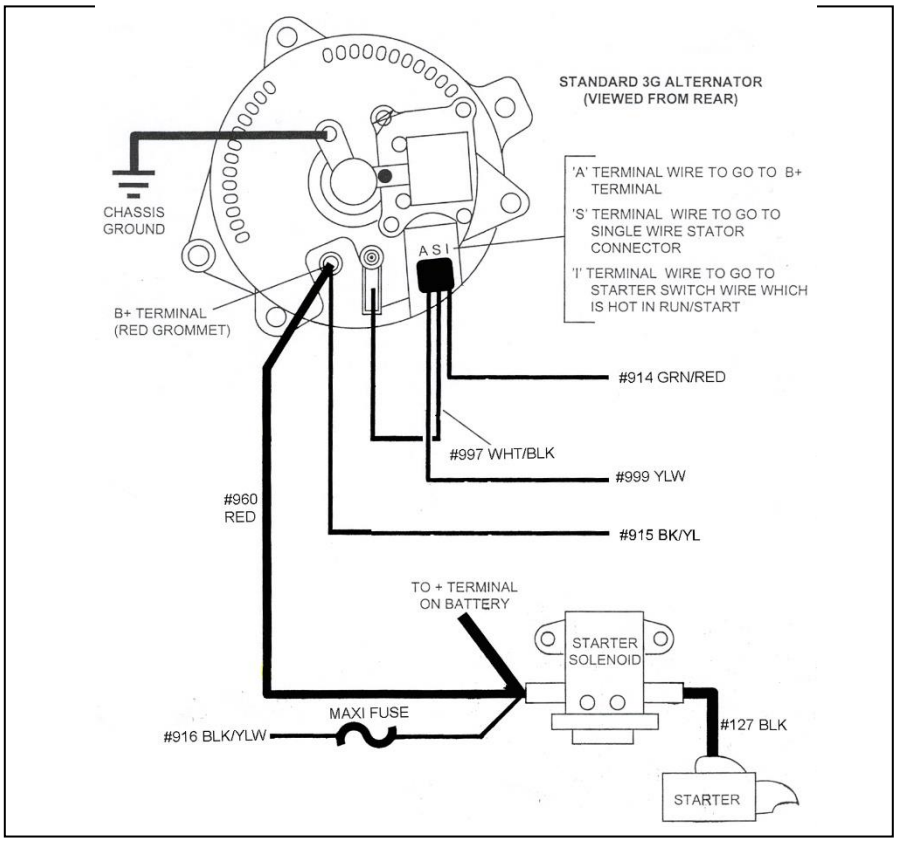

Figure 7-1D Ford 3G Alternator *Note: Wire #996 Org/Blu is not used with a 3G Alternator.*

7.2 Ford Ignition (Start/Run) System. See Figure 7-2A - 7-2C.

Note: If you are going to install an ammeter, see ***Section 8.1 on page 15*** *first.*

Note: Original ignition module wire should be retained if possible. Connectors for the module are no longer serviced.

Note: Painless part number 30812 allows for easy conversion from a points ignition to a Dura Spark II electric ignition system

7.2.1 With crimping tool, attach the Maxi Fuse (**Figure 7-2**) onto end of the (single) 10 ga. wire #916 (BK/YL) AFTER having routed wire (with or without ammeter) from the Fuse Panel to the Starter Relay. This serves as a fuse to protect the entire harness. **DO NOT OMIT IT!**

7.2.2 Connect wire #916 - with Maxi Fuse installed - to the Starter Relay Battery terminal. This is the same lug that the large red cable from the battery is normally connected to.

7.2.3 Connect wire #919 (RD/BL) to the Starter Relay Start (S) terminal. This wire is located in the rolled bundle labeled "Starter Relay"

7.2.4 If you are using a Ballast Resistor, mount it away from other wiring or hoses. The Ballast Resistor gets very hot during operation. Connect ENGINE SECTION A wire #931 (PNK) to one end of the Ballast Resistor. Connect the other end of the Ballast Resistor to the Ignition Coil B+ terminal with 14-gauge wire (you may have enough pink wire left over to accomplish this). If you are not using a Ballast Resistor, connect wire #931 to the Ignition Coil B+ terminal. (**Figure 7-2**)

Note: The Ballast Resistor has been deleted from this kit due to lack of consumer usage. If one is needed in your application, please call Painless Performance at 800-423-9696 for assistance.

7.2.5 The Ignition Coil NEGATIVE (-) terminal is connected to the Distributor. Also connect ENGINE SECTION A wire #923 (GN/RD) to the Ignition Coil NEGATIVE (-) terminal. This is the tachometer source. If you are not using a tachometer, insulate and stow wire #923.

7.2.6 Connect wire #128, located in the "ALT. REGULATOR" rolled wire section, from the Starter Relay Ignition (I) terminal to the ignition coil side of the Ballast Resistor. This wire serves as a ballast resistor BYPASS during engine starting. If you are not using a ballast resistor, leave the Starter Relay Ignition (I) terminal unconnected and do not connect the bypass wire.

7.2.7 Be sure the large, red battery cable is connected from the other side of the Starter Relay to the Starter Motor.

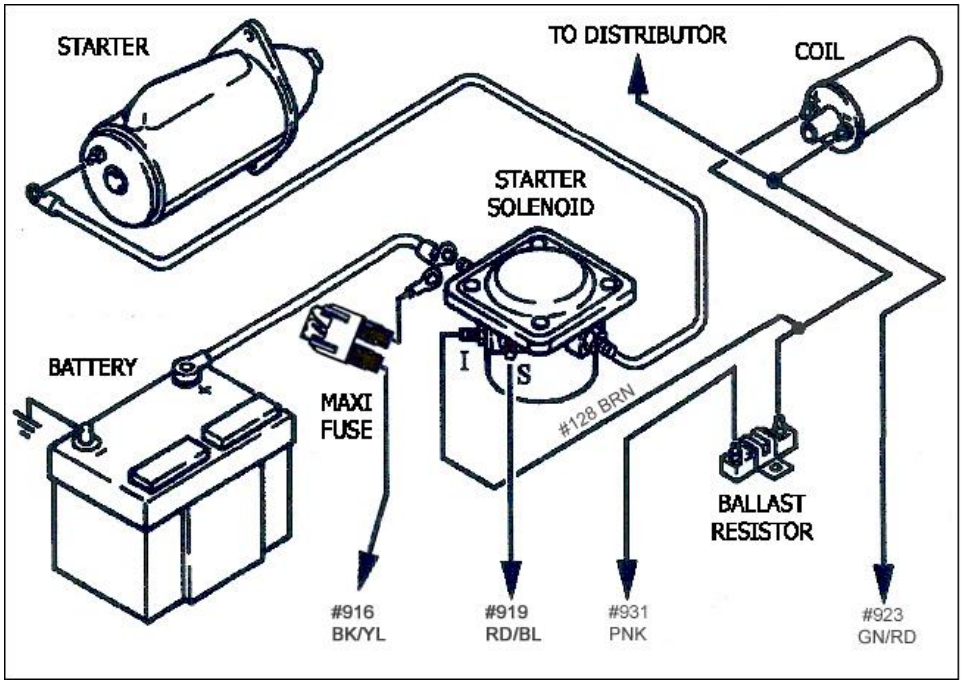

Figure 7-2A Ford Ignition (Start/Run) System

7.3 Steering Column Wiring - Turn Signal Connections

7.3.1 Connect the seven (7) TURN SIGNAL SECTION wires to your automobile's existing Turn Signal Connector according to **Table 7-1**. Refer to **8.7.1** for information on wire #918 (GRN) and if it will be connected at the turn signal switch for your application. Ford wire color codes are provided for reference. Ford has not been uniform in assigning wire colors over the years; so you may find that the wire colors in your existing Ford harness differ from those shown.

7.3.2 If there is any doubt, be on the safe side. Trace the wire(s) with an ohmmeter, circuit tester, or test light. DON'T GUESS! ***Note:*** *Disconnect one end of the wire you are tracing. If you leave it connected, there is the possibility of tracing it back through some other circuit and getting false results.*

7.3.3 Connect the Horn Ground wire to chassis ground. The Painless harness has no corresponding ground wire, nor does it support seat belt buzzers or key alarms.

7.4 Steering Column Wiring - Ignition Switch Connections

7.4.1 Connect the wires of the IGNITION SWITCH SECTION according to **Table 7-1**

7.4.2 On some Fords, the Ignition Switch is designed to bypass the ballast resistor during start. In **Table 7-1**, the red/blu wire supplies power to the coil, bypassing the ballast resistor when the switch is in the "Start" position. Once the engine has started and the switch is released (Run), power is supplied to the coil (through the ballast resistor) by the (variously-colored) wire shown. Jumper these two terminals to the Ignition Switch Connector and connect IGNITION SECTION wire #931 (Pnk) to one or the other. **DO NOT ROUTE AN ADDITIONAL WIRE**. The ballast resistor bypass circuit was wired at **Paragraph 7.2.4**.

7.4.3 IGNITION SWITCH SECTION wire #919 (RD/BL) needs to be routed to the neutral safety switch, cut and connected to it. If the switch is mounted on the floor shifter, extra wire length is given to reach it. FOR SAFETY, PLEASE USE A NEUTRAL SAFETY SWITCH!

TURN SIGNAL SECTION

Ford Color	Designation	Painless Wire No.	Painless Color
Grn	Stop Light	918	Grn
Wht/Blu	RF Turn Signal	925	Wht/Blu
Grn/Wht	LF Turn Signal	926	Grn/Wht
Orn/Blu	RR Turn Signal	948	Orn/Blu
Grn/Orn	LR Turn Signal	949	Grn/Orn
Wht/Red	Hazard Flasher	951	Wht/Red
Blu	Turn Flasher	952	Blu
Ylw	Horn	953	Ylw
Dk.Blu	Horn Ground	Gnd	----

IGNITION SWITCH SECTION

Red/Blu	Start	919	Red/Blu[3]
Red/Grn, Pnk	Ignition Coil (run)	931	Pnk
Red/Blu	Ignition Coil (start)	[2]	----
Blk/Grn or Blk/Ylw	Accessory Fuse Panel	932	Blk/Grn
Gry, Gry/Ylw, or Blk	Ignition Switched Fuse Panel	933	Blk/Grn
Ylw	Battery B+	934	Ylw

NOTES:

**** Not all ignition switches have separate Accessory and Ignition Switched power terminals. On switches that only have one or the other, wires #932 and #933 must be installed on the same terminal. This must be done for everything to work properly. ****

1. Wire may be one of the colors shown, or some other color. See **Paragraph 7.3.1**.
2. Jumper to wire #931. See **Paragraph 7.4.2**.
3. Wire is located in the rolled bundle labeled "Starter Solenoid"

Table 7-1 Ford Ignition and Turn Signal Wiring

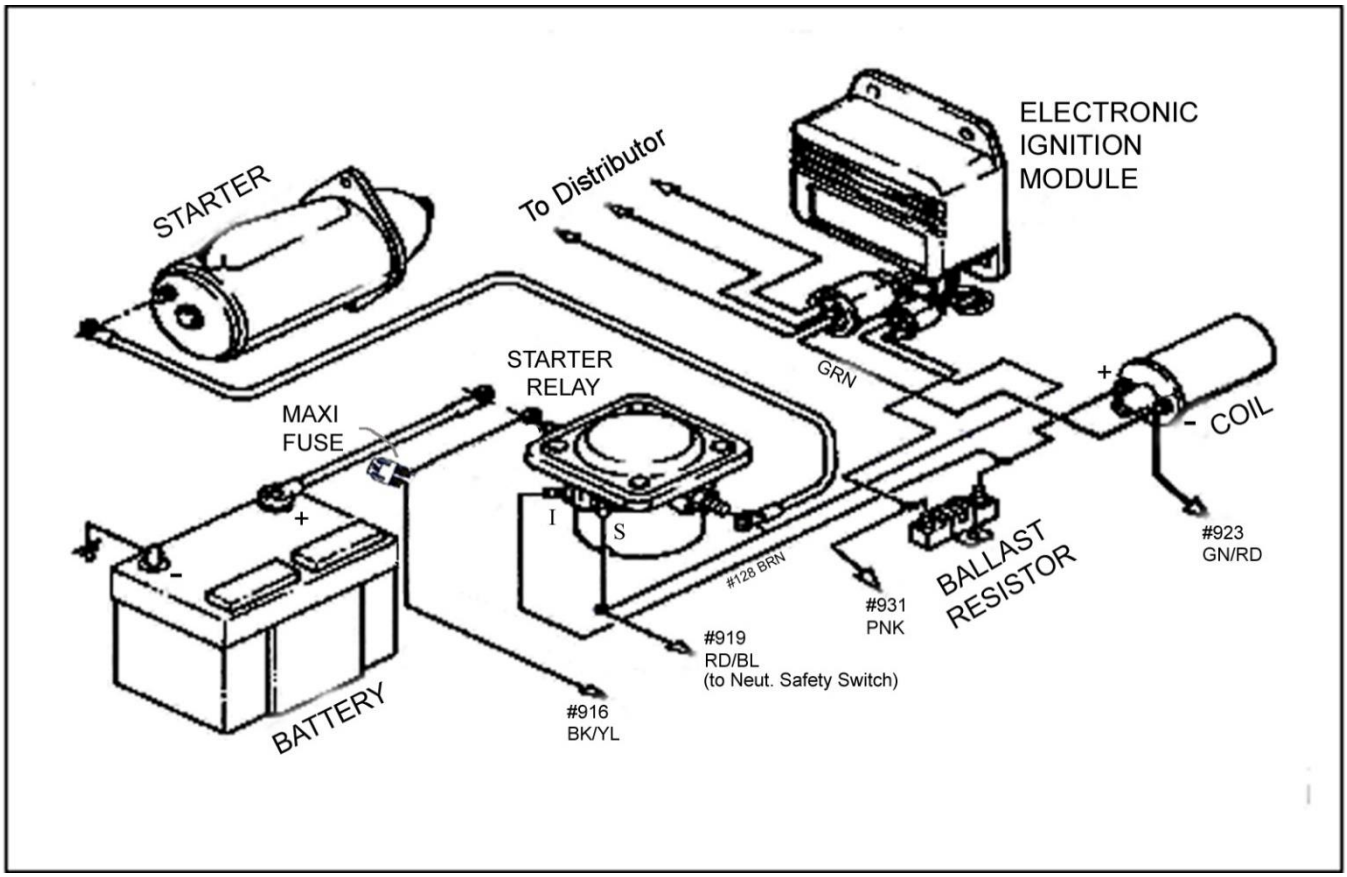

Figure 7-2B Motorcraft Electronic Ignition System

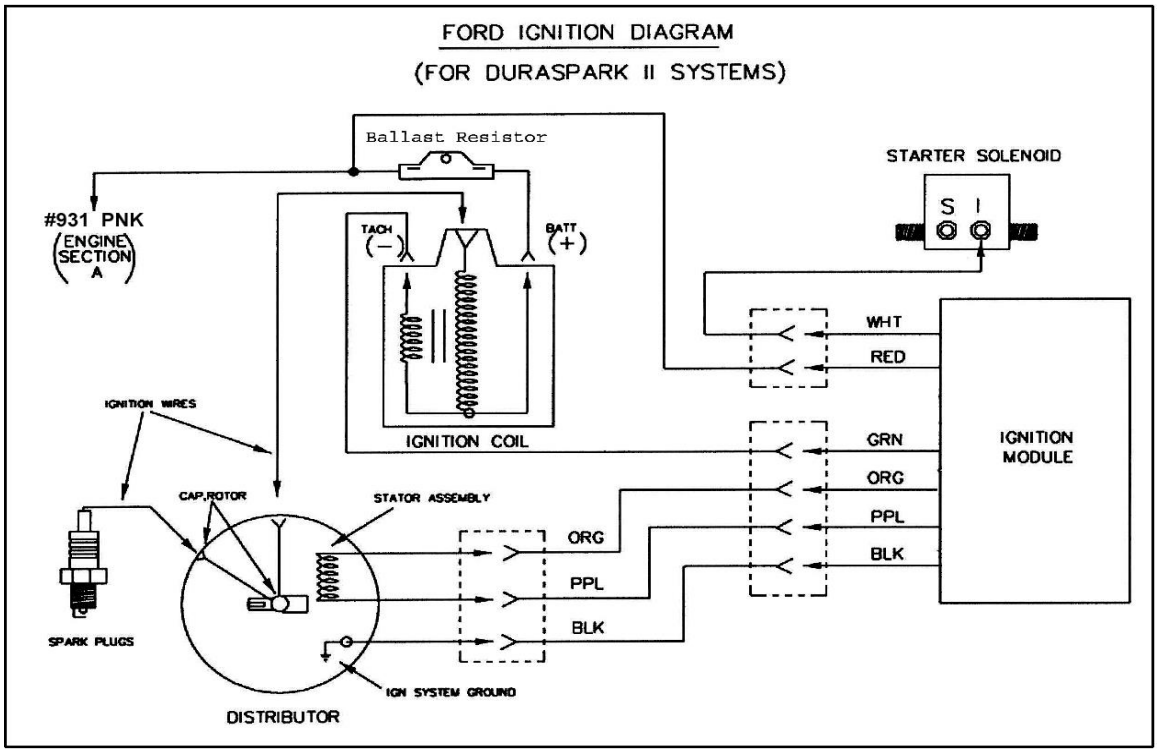

Figure 7-2C Ford Ignition Diagram (Duraspark II Systems)

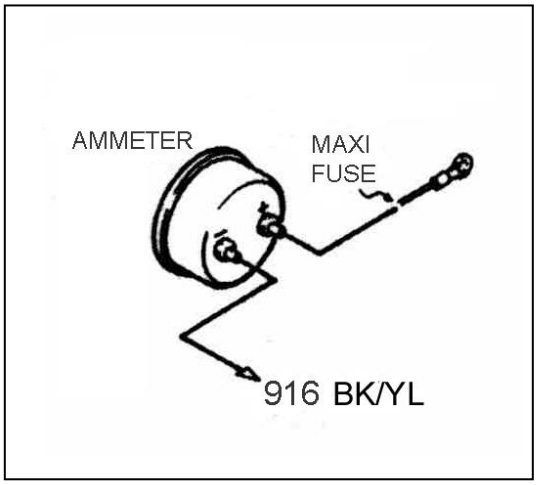

Figure 8-1 Ammeter & Maxi Fuse

8 ALL MAKES – SPECIFIC CIRCUIT CONNECTIONS

8.1 Connecting an Ammeter and the Maxi Fuse. See Figure 8-1.

8.1.1 Most, but not all Ammeters must be inserted IN SERIES onto the (single) 10-gauge wire #916 (BK/YL) that routes from the Fuse Panel to Maxi Fuse (**Section 7.2**).

8.1.2 The overall physical length of this circuit should be as short as possible (allow some slack, however). You may have to cut wire #916 and you may have to add some additional length of 10-gauge wire. USE ONLY 10-GAUGE WIRE OR LARGER.

8.1.3 Route wire #916 (from the Fuse Panel) and connect to the Ammeter NEGATIVE terminal.

8.1.4 Route the remainder of wire #916 from the Ammeter POSITIVE terminal to the Maxi Fuse terminal. Connect the other side of the Maxi Fuse (**Figure 7-3**) to the Starter Solenoid Battery (B+) terminal.

CAUTION: BOTH AMMETER TERMINALS MUST ABSOLUTELY BE ISOLATED FROM GROUND. IF EITHER AMMETER TERMINAL COMES IN CONTACT WITH GROUND A HARNESS FIRE IS INEVITABLE. USE EXTREME CARE AND DILIGENCE IN CONNECTING AMMETERS.

CAUTION: BE SURE YOUR AMMETER'S CURRENT (AMPS) RATING EXCEEDS THE CURRENT OUTPUT OF YOUR ALTERNATOR. PERFECT PERFORMANCE PRODUCTS, LLC DOES NOT RECOMMEND USING ANY AMMETER RATED AT LESS THAN 65 AMPS. DO NOT USE AN AMMETER WITH ANY HIGH OUTPUT ALTERNATOR (MORE THAN 65 AMPS).

8.2 Interior Lighting.

8.2.1 Interior Lights are switched through the door switches and the dash panel light switch. These switches apply power to the circuit. See **Figure 8-2**.

8.2.2 This kit contains 2 extra long wires, #945 Grn/Ylw and #961 Blk/Blu, to accommodate all interior lighting. Wire #945 is a constant battery power source from the fuse block. This wire must be cut and spliced to run to all door switches, to the glove box light/switch and luggage compartment light/switch on models equipped with those features. Wire #961 will provide power from the headlight switch and the door jamb switches to the interior lights. Wire #961 must be cut and spliced to run from the headlight switch, see **Section 8.4** for more information on the headlight switch connections**,** to the door switches and to all interior lights.

8.2.3 If additional door switches are present, such as on 4 door models, install jumper wires from the front door switches to the rear door switches.

8.2.4 Grounds must be connected in order for the lights to function; this kit only provides power to interior lights. It is up to the consumer of this kit to provide proper grounds.

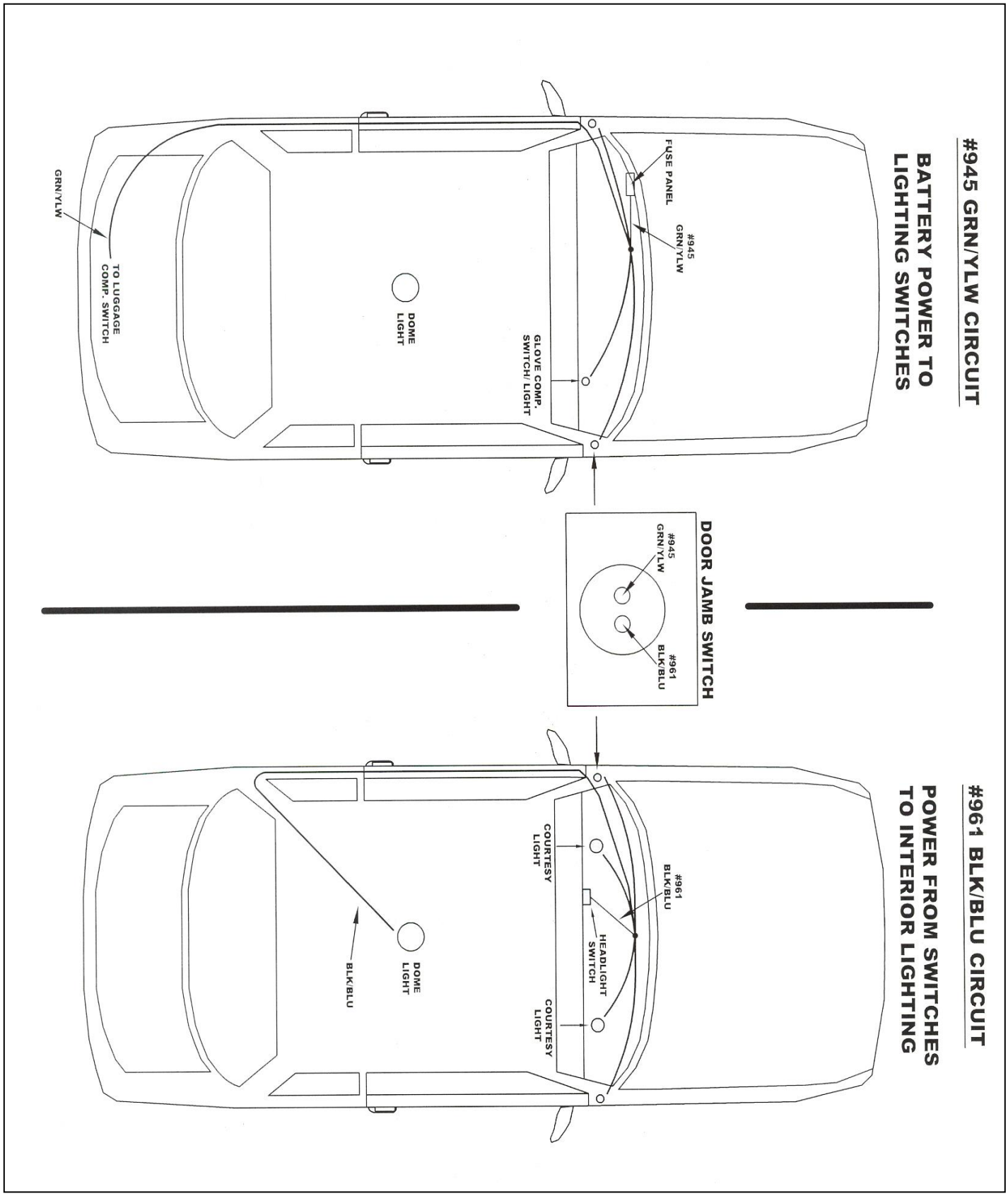

Figure 8-2 Interior Lighting

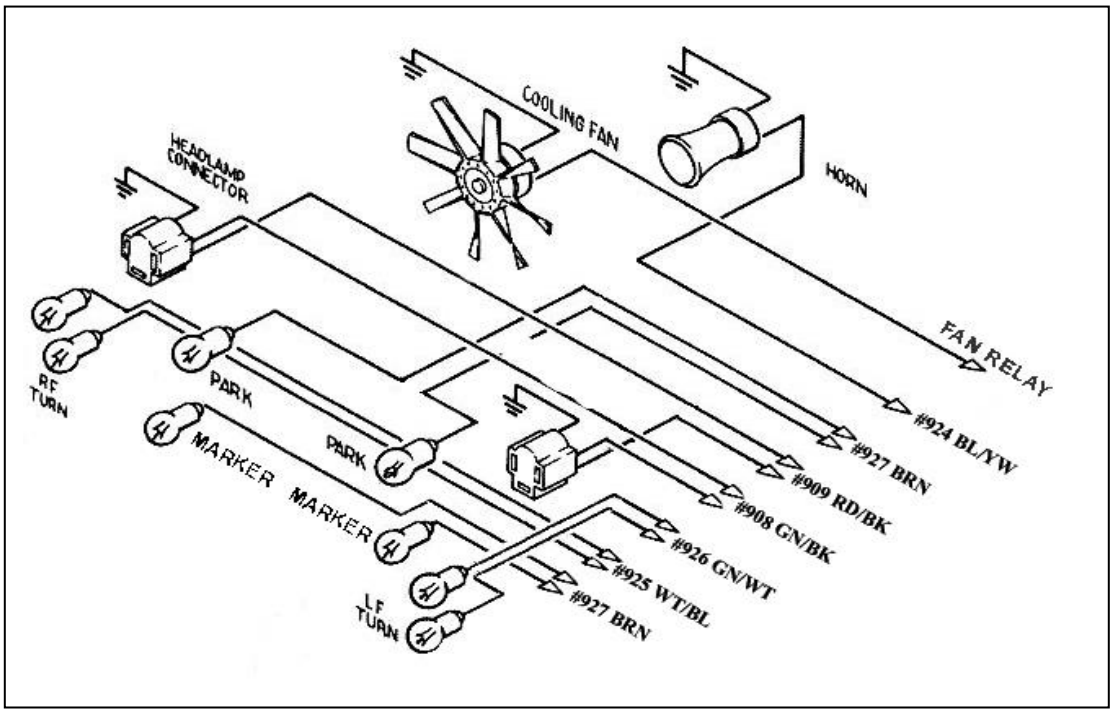

Figure 8-3A HEADLIGHT SECTION A Wiring

8.3 HEADLIGHT SECTION A. See Figure 8-3A.

8.3.1 Connect HEADLIGHT SECTION A wire #924 (Blu/Ylw) to the Horn's hot terminal. TURN SIGNAL SECTION wire #963 (Ylw) was connected in the Turn Signal Connector section of these instructions. The Horn Relay is pre-wired into the Fuse Panel.

8.3.2 Connect HEADLIGHT SECTION A wires #908 (Grn/Blk) to the GREEN and #909 (Red/Blk) to the TAN wires of BOTH Headlamp Connectors. For models with separate high beam head lamps, extra head lamp connectors have been supplied. To make connections for separate high beam lamps, run a jumper wire from the connection of wire #908 (Grn/Blk) and the GREEN wire from the supplied connector, to the GREEN wire of the high beam headlamp connector (see **Figure 8.3 B**). The TAN wire of the high beam headlamp connector is not used. Connect the black wires of the Headlamp Connectors to Chassis Ground. You should have enough wire to accomplish this. You have been supplied with two small grommets (**Figure 3-1**) should you need to pass these wires through a fender well. Don't forget to thread them onto the wires BEFORE you connect the wires.

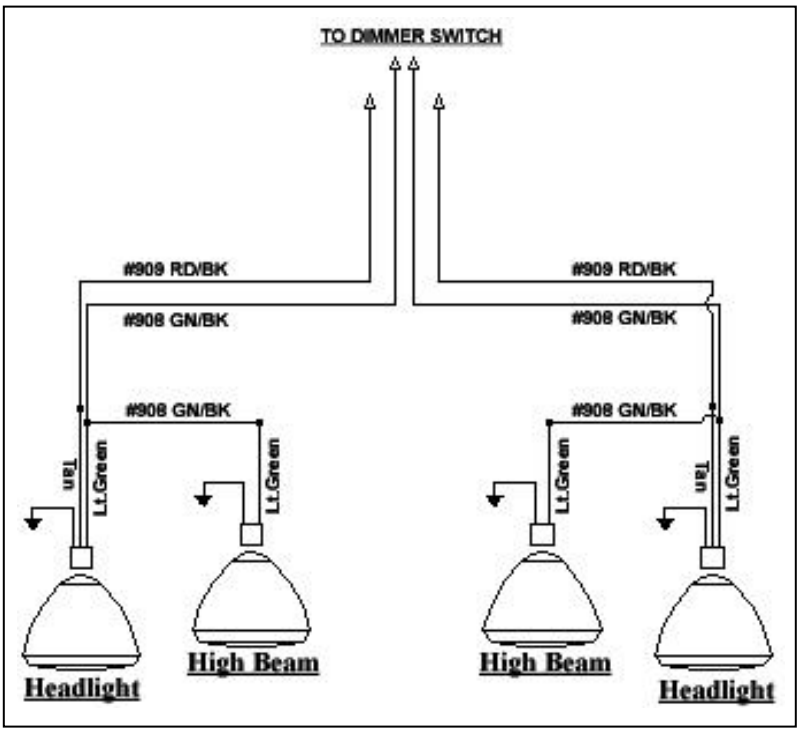

Figure 8.3B Dual Headlamp Connections

8.3.3 Connect HEADLIGHT SECTION A wires #927 (Brn) to ALL front Park Lights and wires# 927 (Brn) to both Marker Lights on models with this feature. Connect HEADLIGHT SECTION A wires #925 (Wht/Blu) to the RIGHT FRONT Turn Signal(s). Connect wires #926 (GRN/Wht) to the LEFT FRONT Turn Signal(s). ***Note:*** *Don't confuse Park Lights or Marker Lights with Turn Signals. For termination, see* ***8.10.3***

8.3.4 Connect HEADLIGHT SECTION A wire #901 (GRY/WHT) to the Electric Fan Relay. This wire is an activation wire for the relay, **NOT A POWER FEED**. The other end of wire #901 is in the ACCESSORY SECTION SWITCHES and should be connected to a electric fan switch in the dash. Connect 906 (GRY/WHT) from ACCESSORY SECTION B+ to the other side of the fan switch. **Figure 8-3C** shows a typical fan relay installation.
Note: The wire going to the fan in Figure 8-3A will be coming from the fan relay output terminal. Wire #901 (GRY/WHT) *from the ACCESSORY SECTION SWITCHES is an activation wire for the fan relay.*

NOTE: If you are using a thermostatic switch in the engine to control the ground for the fan relay, you will then connect the 901 (GRY/WHT) from ACCESSORY SECTION SWITCHES directly to the 906 (GRY/WHT) from ACCESSORY SECTION B+.

8.3.5 Connect the DIMMER SWITCH SECTION to your floor-mounted Dimmer Switch or column-mounted Dimmer Switch. Refer to **Figure 8-3D**

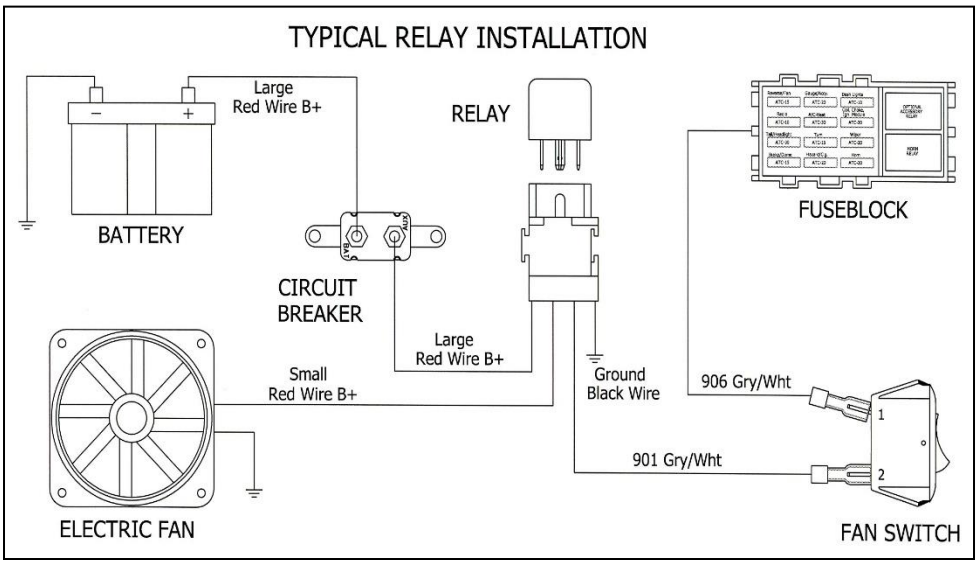

Figure 8-3C Typical fan relay installation

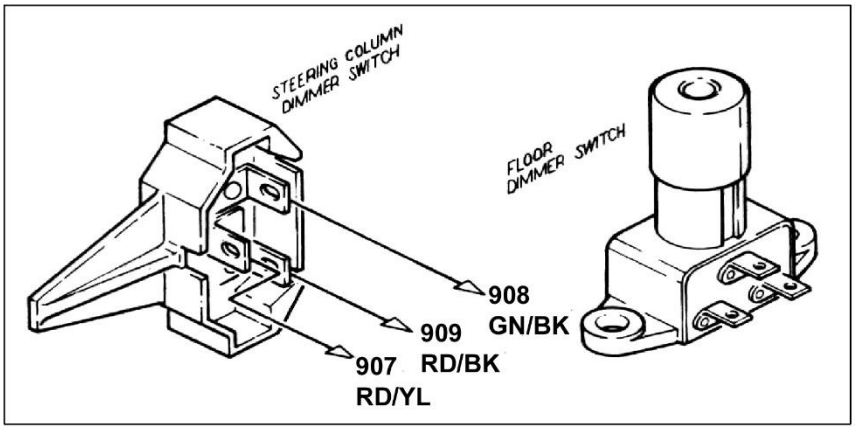

Figure 8-3D Dimmer Switches **(Push Button Style – Painless Part #80150)**

8.4 Headlight Section B and Hazard Switch Wiring.

8.4.1 Connect the 7 wires of HEADLIGHT SECTION B, the 4 wires of the HAZARD SWITCH SECTION,. You should trace out the wires of your existing harness, or refer to a factory diagram of your specific model, and connect the new harness according to **Table 8-1**.

HEADLIGHT SWITCH

COLOR	WIRE #	FUNCTION
GRN/YLW	#959	POWER B+ (TAIL LIGHTS)
RED/YLW	#907	TO DIMMER SWITCH
BLK/ORG	#928	POWER B+ (HEADLIGHTS)
BLK	#929	TO TAIL LIGHTS
BRN	#927	TO PARK LIGHTS
BLU/RED	#930	TO INSTUMENT PANEL LIGHTING
BLK/BLU	#961	TO INTERIOR LIGHTS

HAZARD SWITCH

COLOR	WIRE #	FUNCTION
GRN/WHT	#926	TO LEFT FRONT TURN SIGNAL
WHT/BLU	#925	TO RIGHT FRONT TURN SIGNAL
WHT/RED	#951	POWER B+ (FROM FLASHER)
GRN/RED	#918	TO TURN SWITCH

Table 8-1 Headlight/ Hazard Switch Connections

8.5 Instrument Panel Wiring

8.5.1 Connect the wires of the INSTRUMENT PANEL SECTION as indicated in **Table 9-2**. Referring to the instrument panel drawing, located in the back of this manual, may help as well. Not all instrument panels will use #921 (Grn/Wht). Insulate and stow any wires you do not use.

8.5.2 Connect a jumper from wire #935 (Blk/Grn) to all Gauges' power or "I" terminals. Connect a jumper from wire #930 (Blu/Red) to all Gauges' Instrument Lighting terminals. Connect a jumper to all Gauges' Ground terminals and connect to Chassis Ground.

8.6 Brake Light Switch

8.6.1 Connect wires #917 (Grn/Red) and #918 (Grn) to the Brake Light Switch wherever it may be mounted. These wires are in ENGINE SECTION A

8.6.2 The Third Brake Light wire is pre-connected on the Switch end. Connect TAIL SECTION wire #950 (ORN) to the Third Brake Light if applicable.

8.7 Tail Section

8.7.1 Connect the wires of the TAIL section as indicated in **Table 9-2** with the exception of #918 (Grn) from the Turn Signal Section, #948 (Org/Blu), #949 (Grn/Org) and #950 (ORN).

8.7.2 These 4 wires will be connected according to <u>one</u> of the diagrams shown in **BELOW**. Which diagram you will use depends on whether or not you have <u>one</u> bulb on each side of the vehicle that is for the brake/tail **<u>and</u>** Turn Signal Lights (this is referred to as integrated lights) **or** you have **<u>more than one</u>** bulb on each side **<u>and</u>** the Brake and Turn Signal Lights are hooked to different bulbs (referred to as separate Brake/Turn Lights).

Note A: *If you have Integrated Brake Lights you must use bulbs that have two (2) filaments in them such as in an 1157 bulb.*

Note B: *The three wires shown in these diagrams are connected to the "brighter" of the two filaments when using a two-filament bulb (the Tail Lights are usually connected to the "Dimmer" filament). The Tail Lights, License Plate Lights, Reverse Lights, etc. are not shown on the diagrams for clarity.*

Note C: *In the <u>separate</u> Brake Light diagram the arrangement shown is only one of several ways to wire a vehicle. The important thing is that the Brake and Turn Signal Lights use <u>completely</u> separate bulbs.*

Note D: *The green wire (#918) in the Turn Signal section will **<u>not</u>** be connected to the turn switch when using <u>separate</u> turn lights and brake lights. See figure **8-7B***

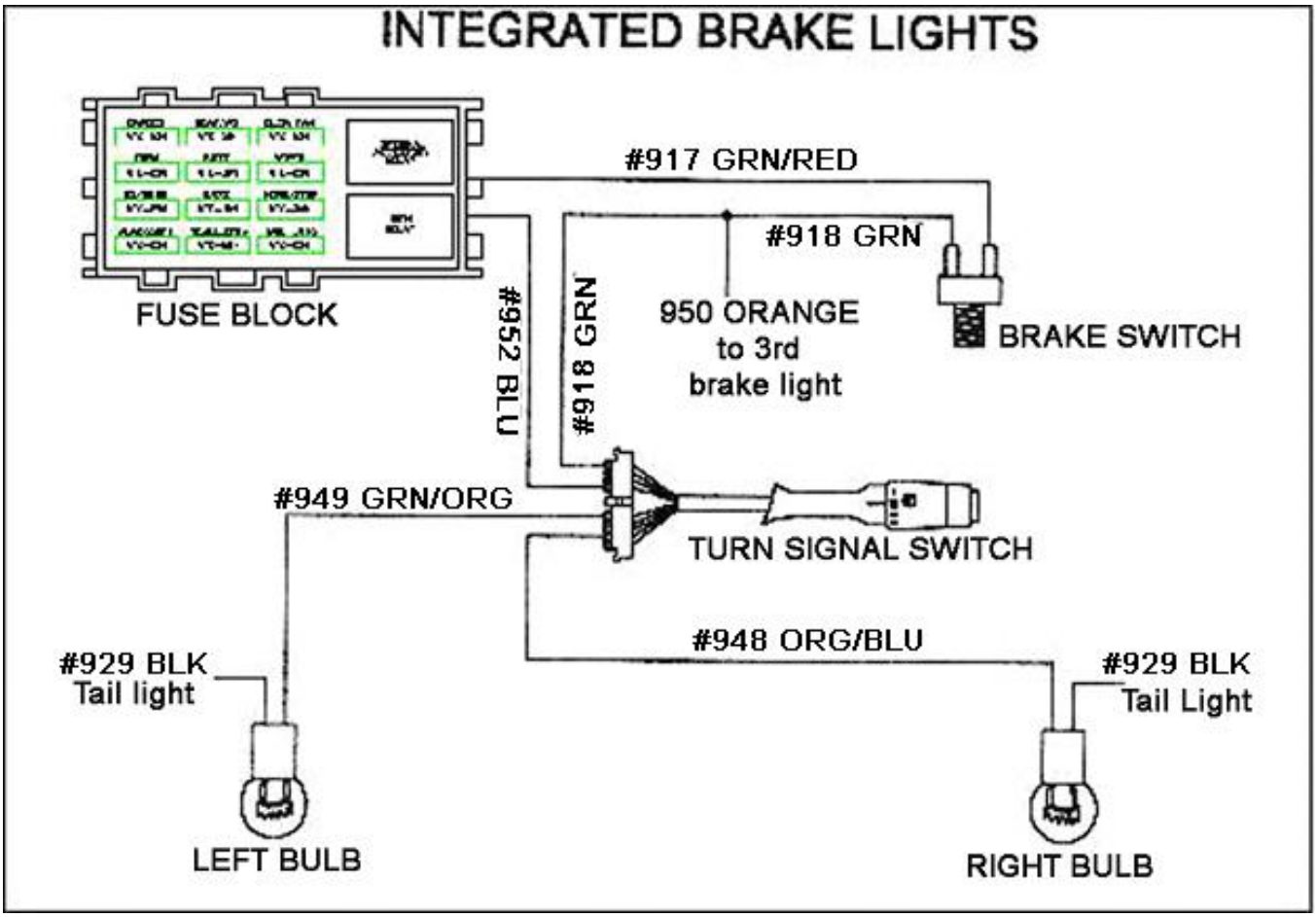

Figure 8-7A Integrated Brake Lights

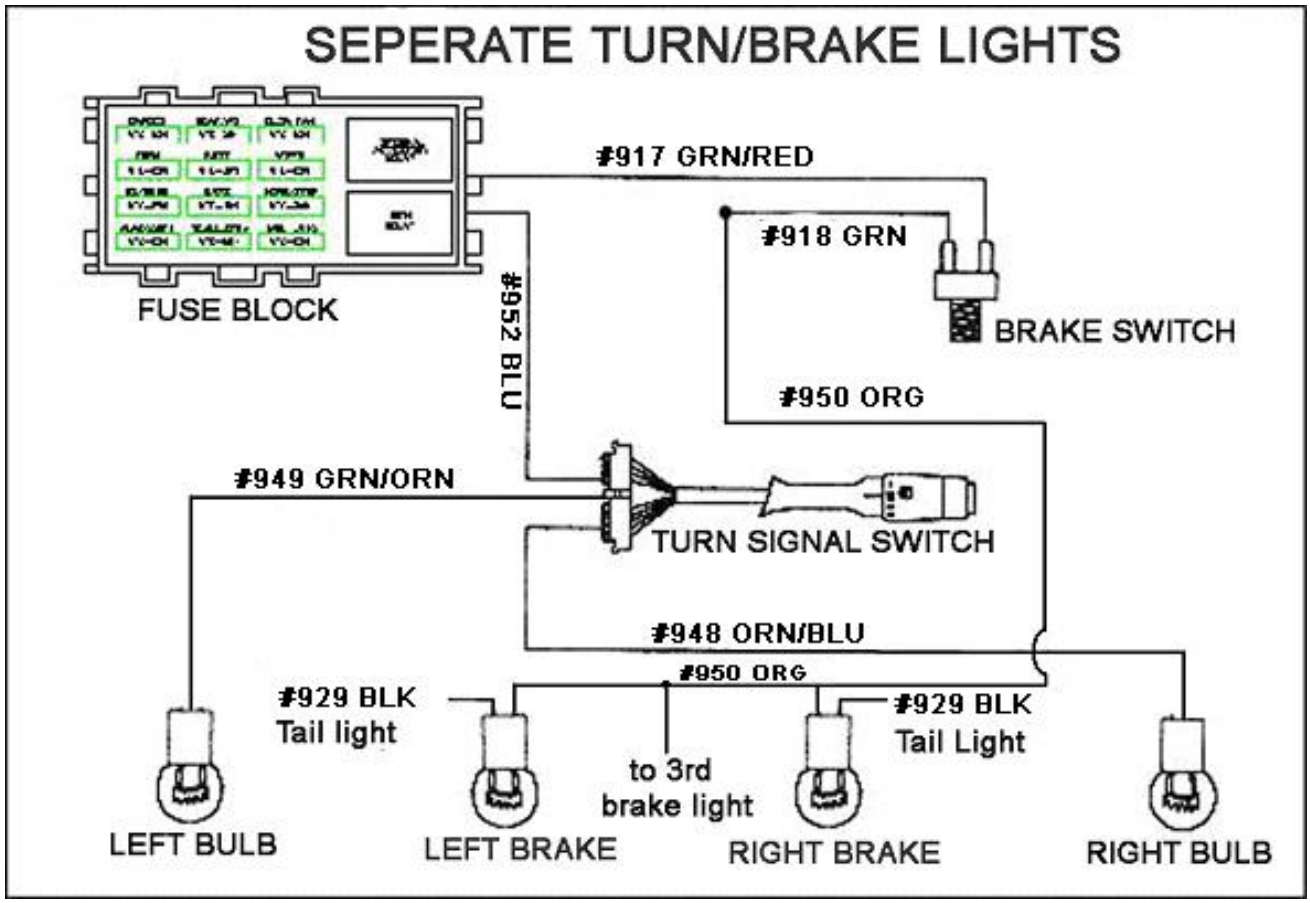

Figure 8-7B Separate Turn/Brake Lights

8.8 Helpful Hints for Tail Section Wiring

8.10.1 When you have Integrated Brake Lights on your vehicle the Turn Signal switch acts as a brain to control when the Lights in the rear are on constantly (braking) or flashing (turning) or a combination of both. **The Turn Signal switch you use must be built to do this! If you are using a steering column out of a salvage yard that was originally in a vehicle that had separate Brake Lights then the switch will not work for Integrated Brake Lights.**

8.10.2 Almost all light bulbs get the ground they need through the socket housing. If you mount your socket housing into anything other than a grounded metal part then you will need to provide a separate ground wire.

9.0 WIRE CONNECTION INDEX

9.1 Wire Connection Index

In each section, connect the wire, as identified by its wire color, to the appropriate item in the CONNECT TO column. Pay close attention to the **Notes** in this section, as identified by a small, raised number such as the one at the end of this sentence.❶

Table 9-1 is divided into sections that correspond to the sections of your wire harness. (ACCESSORY SECTION B+, DIMMER SWITCH SECTION, etc.). The index is divided vertically into six columns. COLOR, GAUGE, NUMBER, CONNECT TO, ORIGIN, and SECTION OF ORIGIN.

The columns labeled ORIGIN and SECTION OF ORIGIN are for your reference ONLY. The items in these columns tell you where each wire originates (ORIGIN) and from which section (SECTION OF ORIGIN) of the harness.

The column labeled NO. contains a 900-series number that is used to identify various wires in the wiring diagrams that are a part of these instructions.

Many (but not all) of the wire numbers occur TWICE in this index. That is because you will be connecting BOTH ENDS of many of the particular wire segments. However, some wire segments are pre-connected at one end. For instance, all wires originating from the fuse panel and flashers. **These pre-connected wires are identified by an asterisk (*) in the ORIGIN column.**

NOTES:

1. 2-color wires: 2nd color (stripe) may not be intense color. Observe two-color wires closely.
2. From fuse panel to brake switch.
3. This wire needs to go from the headlight switch to the instrument panel lights.
4. This wire is power for the portion of the headlight switch that goes out to the headlights and front parking lights.
5. If a neutral safety switch is being used, utilize this extra length to route the 919 Yellow from the ignition switch, to the neutral safety switch on the shifter or transmission, and then to the starter solenoid. If not using a neutral safety switch, cut 919 Yellow to length needed to reach the starter solenoid from the ignition switch, and discard extra length.
6. If a floor shifter is being used, utilize this extra length to route the 930 Blu/Red to the gear select Indicator light on the console. If not using a floor shifter, cut 930 Blu/Red to length needed to reach the gear select indicator light.
7. This wire is located in a rolled wire connection, it has 2 connections that need to be made.

Table 9-1 Wire Connection Index 1 of 3

Color	Ga.	No.	Connect to	Wire Starting Point	Section of Starting Point
			ACCESSORY SECTION SWITCHES		
Gry/Wht[1]	18	901	Cooling Fan Switch	Fan Relay	Headlight Section A
Blk/Wht[1]	14	902	AC/Heat Switch	A/C Compressor	Engine Section A
			ACCESSORY SECTION B+		
Brn/Orn[1]	14	904	AC/Heat Switch B+	Fuse Panel*	Fuse Panel
Orn/Wht[1]	16	905	Wiper Switch B+	Fuse Panel*	Fuse Panel
Gry/Wht[1]	18	906	Cooling Fan Switch B+	Fuse Panel*	Fuse Panel
			DIMMER SWITCH SECTION		
Red/Ylw[1]	14	907	Dimmer Switch	Headlight Switch	Headlight Section B
Grn/Blk[1]	14	908	Dimmer Switch	High Beam	Headlight Section A
Red/Blk[1]	14	909	Dimmer Switch	Low Beam	Headlight Section A
			ENGINE SECTION		
Grn/Red[1]	14	914	Alternator Exciter	Fuse Panel*	Fuse Panel
Blk/Wht[1]	14	902	A/C Compressor	A/C Central Switch	Accy. Section Switches
			ENGINE SECTION		
Blk/Ylw[1]	10	916	Battery Positive or Starter Solenoid (Large Terminal)	Fuse Panel*	Fuse Panel
Ylw	12	999	"A" on Regulator	Fuse Panel*	Fuse Panel
Blk/Ylw[1]	12	915	Alternator Output Post	Starter Relay	Alternator Regulator
			ENGINE SECTION A		
Red/Grn[2]	14	917	Brake Switch B+	Fuse Panel*	Fuse Panel
Grn	16	918	Brake Switch	Turn Signal Switch	Turn Signal Section
Red/Wht[1]	18	921	Temperature Sending Unit *Hot	Temperature Gauge	Instrument Panel Section
Grn/Wht[1]	18	921	Temperature Sending Unit *Cold	Temperature Gauge	Instrument Panel Section
Wht/Red[1]	18	922	Oil Pressure Sending Unit	Oil Pressure Gauge	Instrument Panel Section
Grn/Red[1]	18	923	Tachometer Source	Tachometer	Instrument Panel Section
Red/Ylw[1]	18	954	Electric Choke	Fuse Panel*	Fuse Panel
Pnk	14	931	Coil (B+)	Coil	Ignition Switch Section
Ppl	18	968	Brake Warning Switch	Brake Warn	Ignition Switch Section
Ppl	18	968	Brake Warning Switch	Brake Warn Light	Instrument Panel Section
			HEADLIGHT SECTION A		
Blu/Ylw[1]	14	924	Horn B+	Horn Relay*	Fuse Panel
Wht/Blu[1]	18	925	Right Front Turn Signal(s)	Turn Signal Switch	Turn Signal Section
Grn/Wht[1]	18	926	Left Front Turn Signal(s)	Turn Signal Switch	Turn Signal Section
Brn	18	927	Park Lights	Headlight Switch	Headlight Switch Section
Brn	16	927	Marker Lights	Headlight Switch	Headlight Switch Section
Grn/Blk[1]	16	908	High Beam	Dimmer Switch	Dimmer Switch Section
Red/Blk[1]	16	909	Low Beam	Dimmer Switch	Dimmer Switch Section
Gry/Wht[1]	18	901	Fan Relay	Fan Switch	Accy. Section Switches
			HEADLIGHT SECTION B		
Blk/Org[1,4]	12	928	Headlight Switch B+	Fuse Panel*	Fuse Panel
Red/Ylw[1]	14	907	Headlight Switch	Dimmer Switch	Dimmer Switch Section
Blk	14	929	Headlight Switch	Tail Lights	Tail Section
Brn	18	927	Headlight Switch	Park Lights	Headlight Section A
Grn/Ylw[1]	14	959	Headlight Switch B+	Fuse Panel*	Fuse Panel
Blu/Red[1]	18	930	Headlight Switch	Inst. Panel lighting	Instrument Panel Section
Blk/Blu[1]	16	961	Headlight Switch	Interior lights	Courtesy Light Section

Table 9-1 Wire Connection Index 2 of 3

Color	Ga.	No.	Connect to	Wire Starting Point	Section of Starting Point
			IGNITION SECTION		
Blk/Grn[1]	12	933	Ign. Switch Ignition	Fuse Panel*	Fuse Panel
Ylw	10	934	Ign. Switch B+	Fuse Panel*	Fuse Panel
Blk/Grn[1]	12	932	Accy B+	Fuse Panel*	Fuse Panel
Pnk	14	931	Coil B+	Coil	Engine Section A
Red/Blu[1]	12	919	Start Solenoid ("S" Terminal)	Start Solenoid	Engine Section A
Blu/Red [6]	16	930	Gear Select Indicator	Panel Light Switch	Panel Light section
Blk/Red[1]	16	956	Reverse Lights	Reverse Lights	Tail Section
Blk/Red[1]	16	958	Back Up Switch (B+)	Fuse Panel*	Fuse Panel
Ppl	18	968	Brake Warn	Brake Warn Switch	Engine Section A
			INSTRUMENT PANEL SECTION		
Blk/Grn[1]	18	935	Voltmeter Source & Gauges B+	Fuse Panel*	Fuse Panel
Grn/Blk[1]	18	936	High Beam Indicator	Dimmer Switch*	Dimmer Switch Section
Grn/Wht[1]	18	937	Left Turn Indicator	Left Front Turn Signal	Turn Signal Section
Wht/Blu[1]	18	938	Right Turn Indicator	Right Front Turn Sig.	Turn Signal Section
Blu/Red[1]	18	930	Instrument Panel Lighting	Headlight Switch	Headlight Section B
Ylw/Wht[1]	18	939	Fuel Gauge	Fuel Sending Unit	Tail Section
Red/Wht[1]	18	921	Temperature Gauge *Hot	Temp. Sending Unit	Engine Section A
Wht/Red[1]	18	922	Oil Pressure Gauge	Oil Pres. Sending Unit	Engine Section A
Grn/Red[1]	18	923	Tachometer	Tachometer Source	Engine Section A
Ylw	14	992	Accessory Relay Output	Fuse Panel*	Fuse Panel
Ylw/Blk[1]	18	993	Accessory Relay Activation	Fuse Panel*	Fuse Panel
Blk	18	991	Accessory Relay Ground	Fuse Panel*	Fuse Panel
Grn/Wht[1]	18	921	Temperature Gauge *Cold	Temp. Sending Unit	Engine Section A
Ppl	18	968	Brake Warning Light	Brake Warning Switch	Engine Section A
			RADIO SECTION		
Red	18	940	Radio B+ Unswitched (Constant)	Fuse Panel*	Fuse Panel
Red/Wht[1]	18	941	Radio B+ Switched	Fuse Panel*	Fuse Panel
			TAIL SECTION		
Org/Blu[1]	14	948	Right Rear Turn Signal	Turn Signal Switch	Turn Signal Section
Grn/Org[1]	14	949	Left Rear Turn Signal	Turn Signal Switch	Turn Signal Section
Ylw/Wht[1]	18	939	Fuel Sending Unit	Fuel Gauge	Instrument Panel Section
Blk	14	929	Tail Lights	Headlight Switch	Headlight Section B
Orn	18	950	Third Brake Light	Turn Signal Switch*	Turn Signal Section
Brn	16	927	Marker Lights	Headlight Switch	Headlight Section B
Blk	16	962	License plate light	Headlight Switch	Headlight Section B
Blk/Red[1]	16	956	Reverse Lights	Backup Switch	Ignition Section
Grn/Ylw[1]	18	946	Luggage Compartment Switch	Fuse Panel*	Fuse Panel
			TURN SIGNAL SECTION		
Blu	14	952	Turn Signal Switch Flasher B+	Turn Flasher Relay*	Fuse Panel
Ylw	18	953	Horn Switch	Horn Relay*	Fuse Panel
Org/Blu[1]	14	948	Turn Signal Switch	Right Rear Turn Signal	Tail Section
Grn/Org[1]	14	949	Turn Signal Switch	Left Rear Turn Signal	Tail Section
Wht/Blu[1]	18	925	Turn Signal Switch	Right Front Turn Signal	Headlight Section A
Grn	16	918	Turn Signal Switch	Brake Switch	Engine Section A
Grn/Wht[1]	18	926	Turn Signal Switch	Left Front Turn Signal	Headlight Section A
			HAZARD SWITCH SECTION		
Grn/Wht[1]	16	926	Hazard Switch	Left Front Turn Signal	Turn Signal Section
Wht/Blu[1]	16	925	Hazard Switch	Right Front Turn Sig.	Turn Signal Section
Wht/Red[1]	16	951	Hazard Switch (B+)	Emer. Flasher Relay*	Fuse Panel
Grn/Red[1]	16	918	Hazard Switch	Brake Switch	Engine Section A

Table 9-1 Wire Connection Index 3 of 3

Color	Ga.	No.	Connect to	Wire Starting Point	Section of Starting Point
			Alternator Regulator		
Org/Blu[1,7]	14	996	"F" on Regulator to "F" on Alternator	-	-
Wht/Blk[1,7]	14	997	"S" on Regulator to "S" on Alternator	-	-
Blk/Red[1,7]	16	998	Ground on Regulator to "G" on Alternator	-	-
Brn[7]	16	128	Relay to Coil (+)	-	-

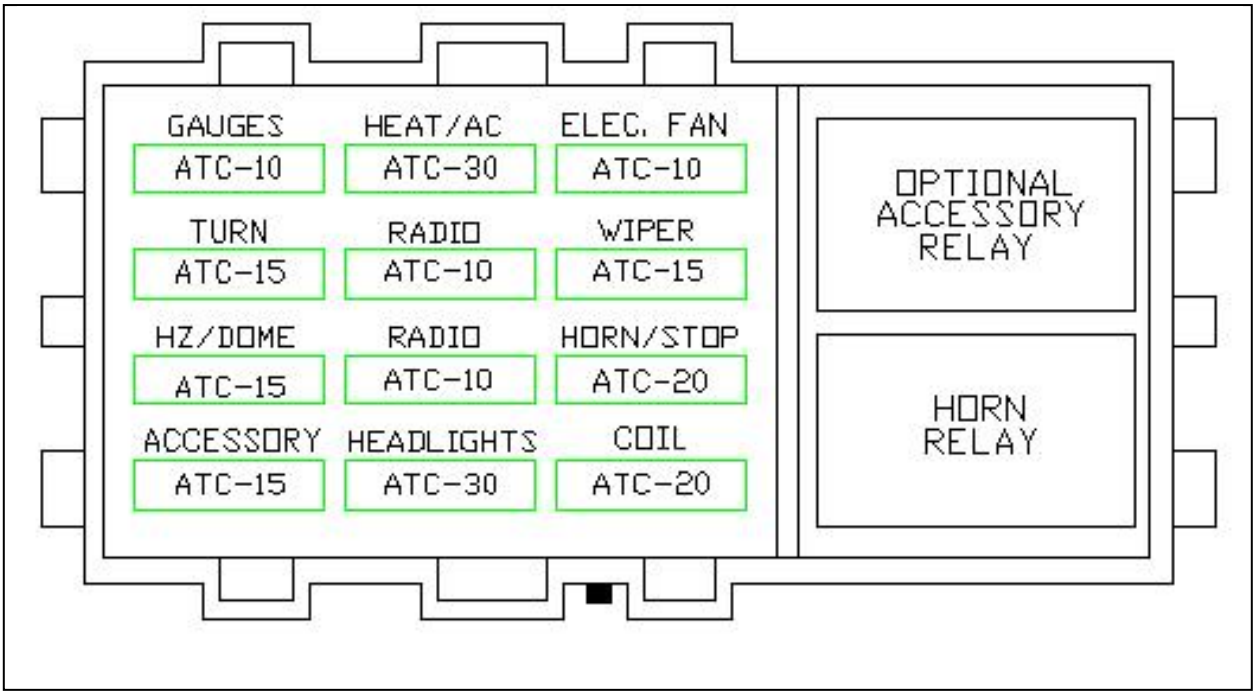

Figure 9.1 Fuse Requirements

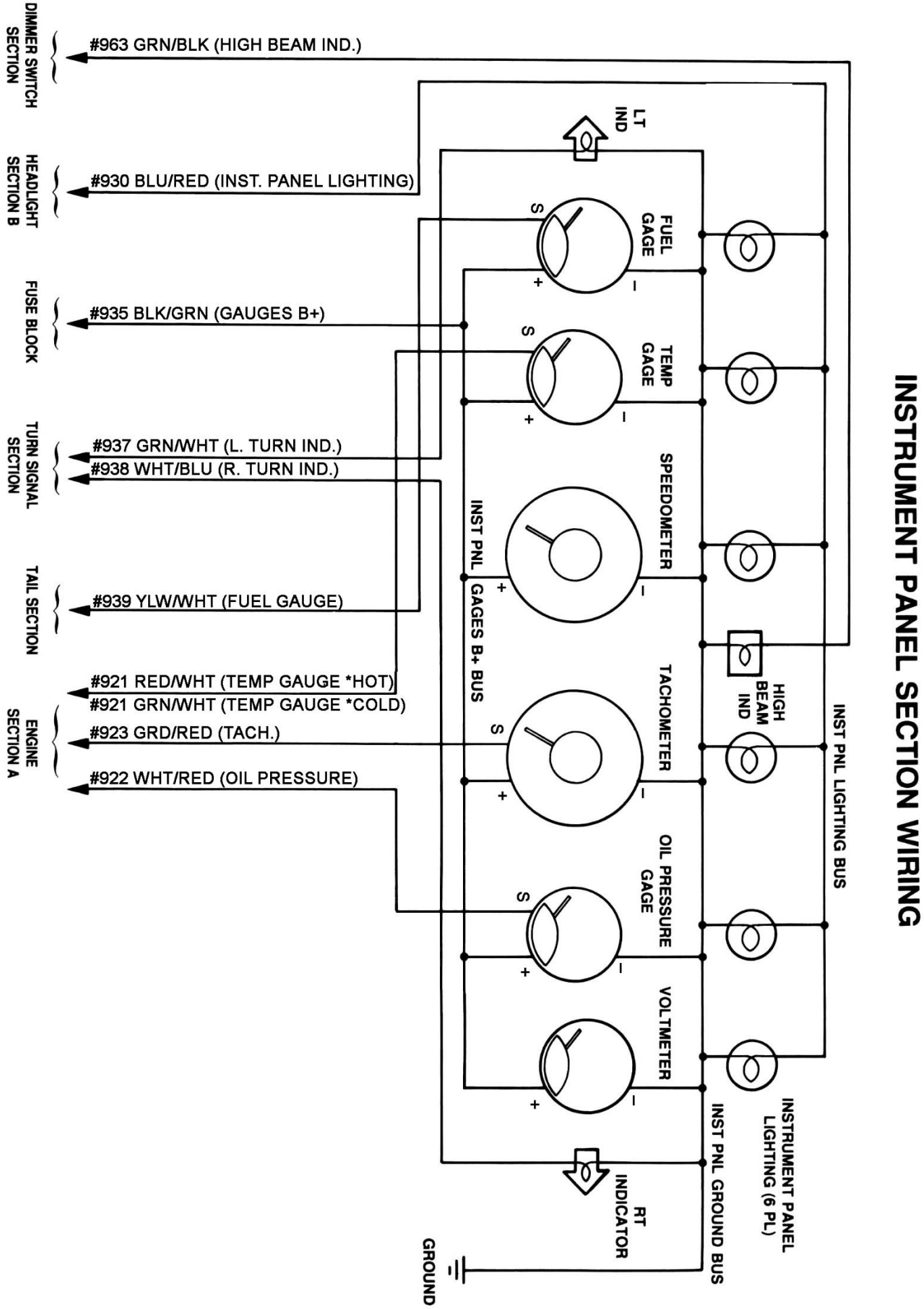

DIAGRAM 1- Instrument Panel Wiring

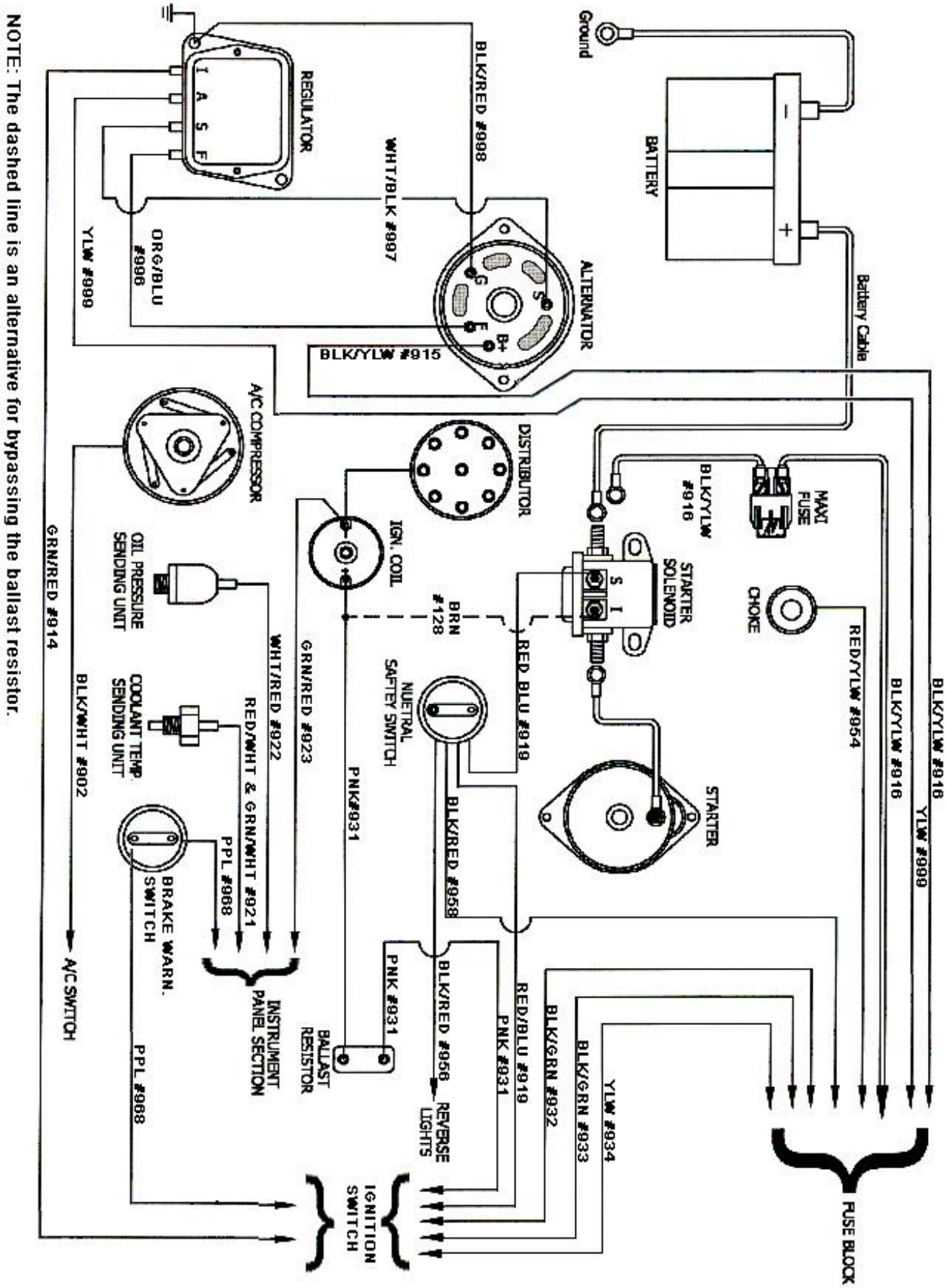

NOTE: The dashed line is an alternative for bypassing the ballast resistor.

Diagram 2 Engine wiring

Painless Performance Limited Warranty and Return Policy

Chassis harnesses, fuel injection harnesses, and Striker ColdShot units are covered under a lifetime warranty.

All other products manufactured and/or sold by Painless Performance are warranted to the original purchaser to be free from defects in material and workmanship under normal use. Painless Performance will repair or replace defective products without charge during the first 12 months from the purchase date. No products will be considered for warranty without a copy of the purchase receipt showing the sellers name, address and date of purchase. You must return the product to the dealer you purchased it from to initiate warranty procedures.

NOTES: