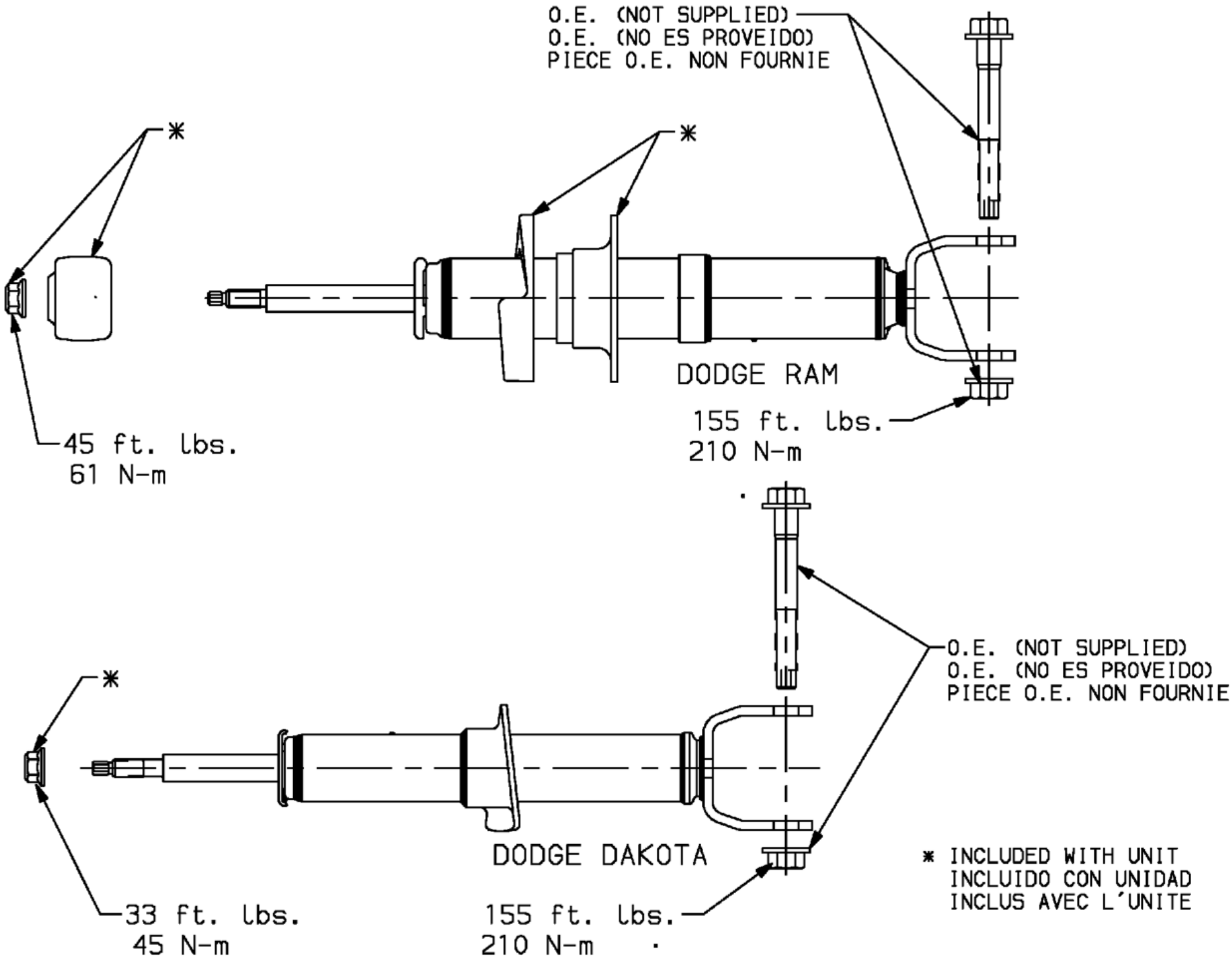

FORM01140T REV A