Rhino-Rack 2500 Series

Instruction for DK479 and RS729

			FRONT						REAR					
					Crossbar Identification						Crossbar Identification			
			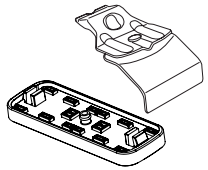		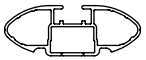 VA	EURO	HD	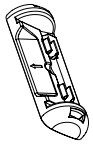	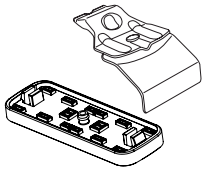		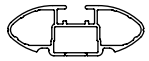 VA	EURO	HD	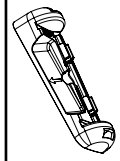
Vehicle	**Date**	**Crossbar**	**Front Right Pad/Clamp**	**Front Left Pad/Clamp**	**Measurement strip length per side**	**Measurement strip length per side**	**Measurement Distance (x)**	**Foot plate arrow direction**	**Rear Right Pad/Clamp**	**Rear Left Pad/Clamp**	**Measurement strip length per side**	**Measurement strip length per side**	**Measurement Distance (x)**	**Foot plate arrow direction**
KIA Stinger 5dr Liftback	17-	1260mm	M435 SUB0176	M436 SUB0176	185mm	72mm	1018mm / 40,3/32”	**OUT** M311	M368 SUB0176	M368 SUB0176	164mm	51mm	976mm / 38,7/16”	**OUT** Rear Right M879
			Pad Arrow Forward						Pad Arrow Out					**OUT** Rear Left M881

Table above refers to Direction of Pad Arrow and Foot Plate Arrow when fitted on the vehicle.

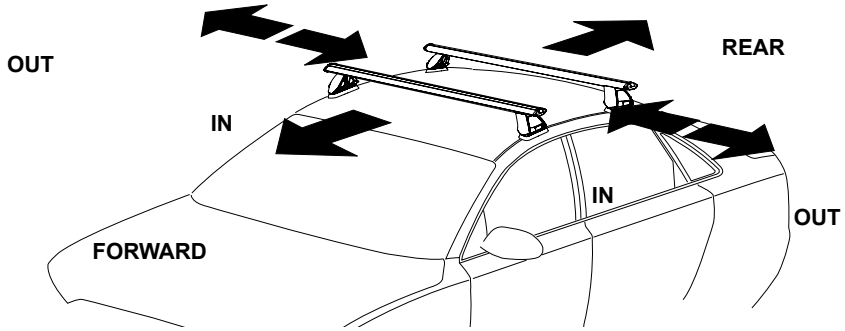

Rhino-Rack 2500 Series

Measurement A: CENTRE of door jamb to CENTRE arrow of leg foot plate.

Measurement B: CENTRE of Front leg foot plate arrow to CENTRE of Rear leg foot plate arrow.

Carrying capacity: Roof rack is rated up to 75kg. Please refer to manufacturers handbook for your vehicles maximum roof load capacity. Always use the lower of the two figures.

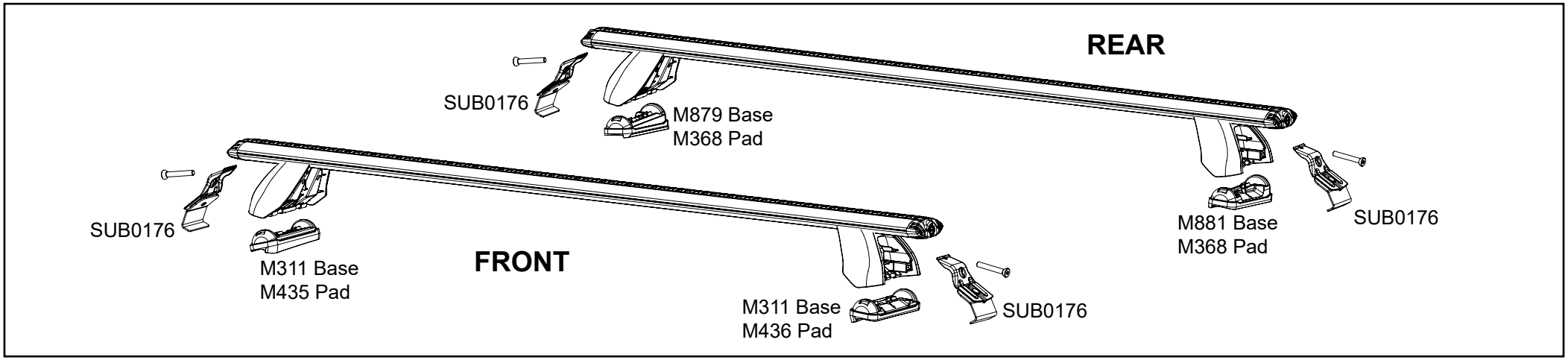

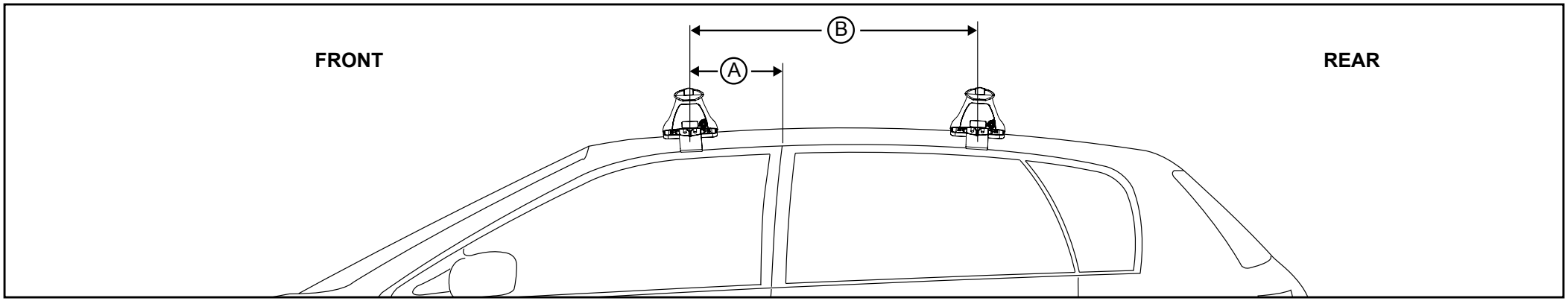

VEHICLE	Date	Measurement A	Measurement B	Load Rating up to (includes racks 5kg/ 11lbs)
KIA Stinger 5dr Liftback	17-	240mm / 9,29/64”	750mm / 29,17/32”	75kg / 165lbs