Parts List

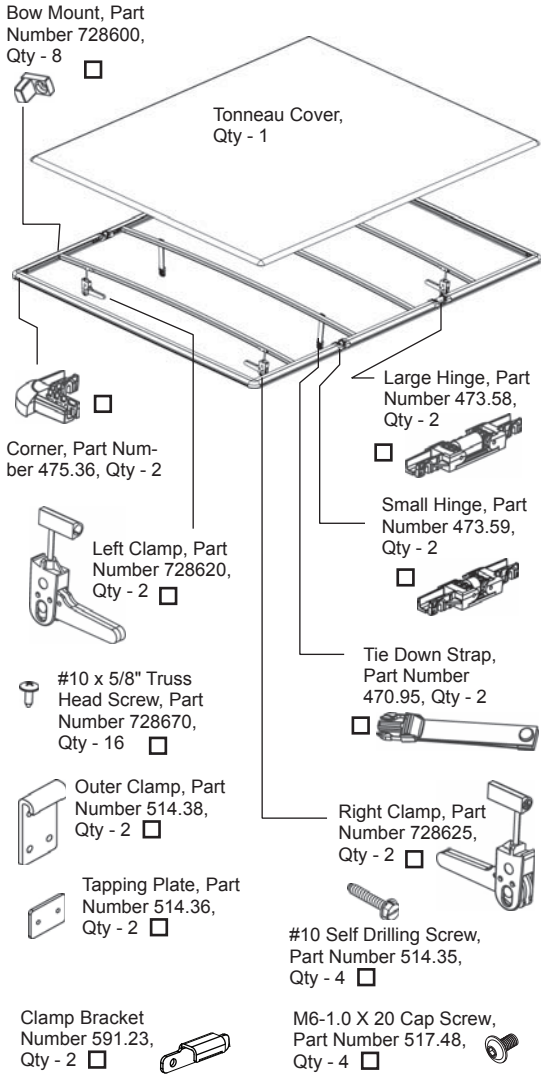
Bow Mount, Part Number 728600, Qty - 8
Tonneau Cover, Qty - 1
Corner, Part Number 475.36, Qty - 2
Large Hinge, Part Number 473.58, Qty - 2
Small Hinge, Part Number 473.59, Qty - 2
Left Clamp, Part Number 728620, Qty - 2
Tie Down Strap, Part Number 470.95, Qty - 2
#10 x 5/8" Truss Head Screw, Part Number 728670, Qty - 16
Outer Clamp, Part Number 514.38, Qty - 2
Right Clamp, Part Number 728625, Qty - 2
Tapping Plate, Part Number 514.36, Qty - 2
#10 Self Drilling Screw, Part Number 514.35, Qty - 4
Clamp Bracket Number 591.23, Qty - 2
M6-1.0 X 20 Cap Screw, Part Number 517.48, Qty - 4