Parts List

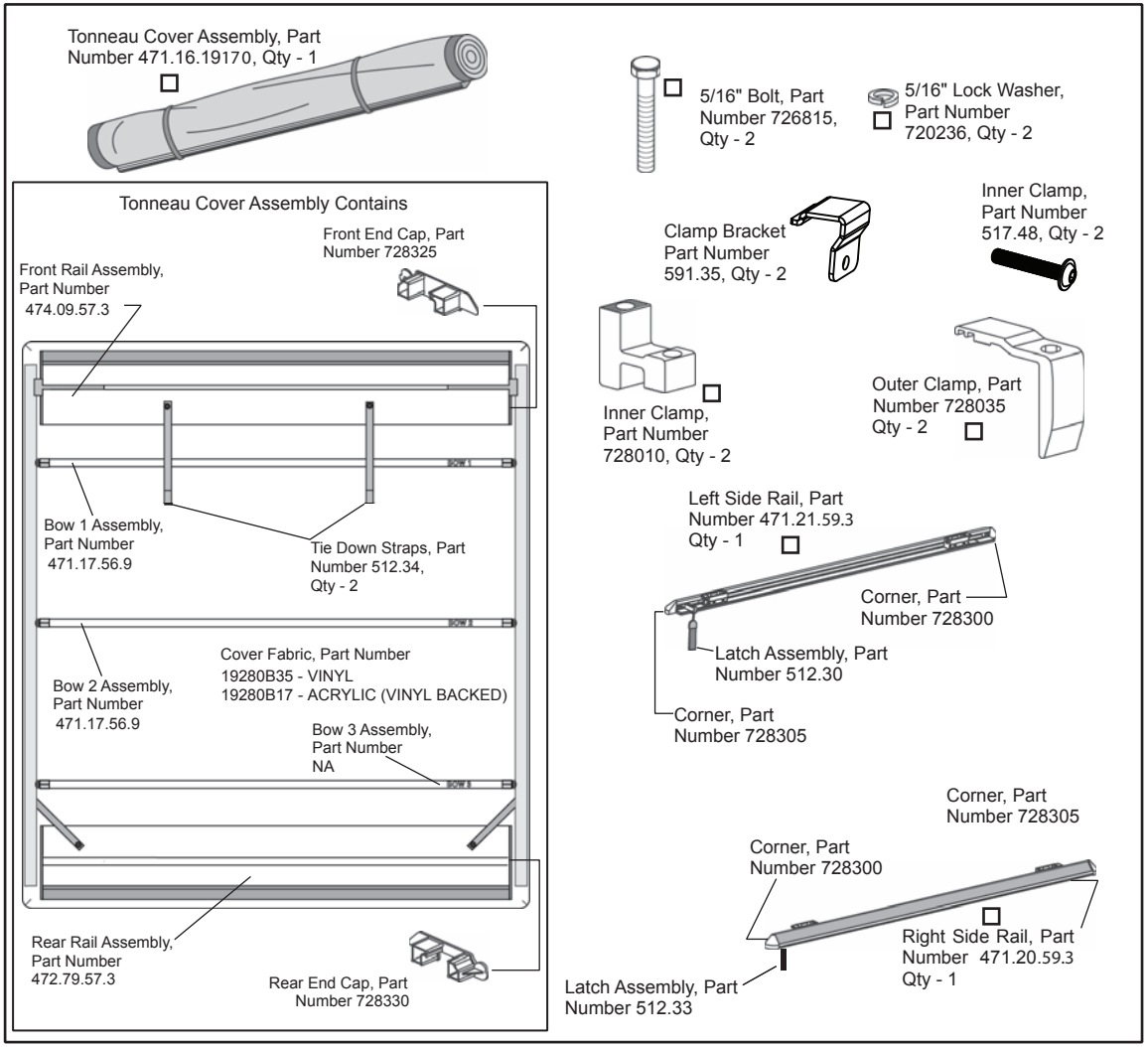
Tonneau Cover Assembly, Part Number 471.16.19170, Qty - 1
5/16" Bolt, Part Number 726815, Qty - 2
5/16" Lock Washer, Part Number 720236, Qty - 2
Tonneau Cover Assembly Contains
Front End Cap, Part Number 728325
Front Rail Assembly, Part Number 474.09.57.3
Clamp Bracket Part Number 591.35, Qty - 2
Inner Clamp, Part Number 517.48, Qty - 2
Inner Clamp, Part Number 728010, Qty - 2
Outer Clamp, Part Number 728035 Qty - 2
Left Side Rail, Part Number 471.21.59.3 Qty - 1
Bow 1 Assembly, Part Number 471.17.56.9
Tie Down Straps, Part Number 512.34, Qty - 2
Corner, Part Number 728300
Latch Assembly, Part Number 512.30
Cover Fabric, Part Number
19280B35 - VINYL
19280B17 - ACRYLIC (VINYL BACKED)
Bow 2 Assembly, Part Number 471.17.56.9
Corner, Part Number 728305
Bow 3 Assembly, Part Number NA
Corner, Part Number 728305
Corner, Part Number 728300
Right Side Rail, Part Number 471.20.59.3 Qty - 1
Rear Rail Assembly, Part Number 472.79.57.3
Rear End Cap, Part Number 728330
Latch Assembly, Part Number 512.33