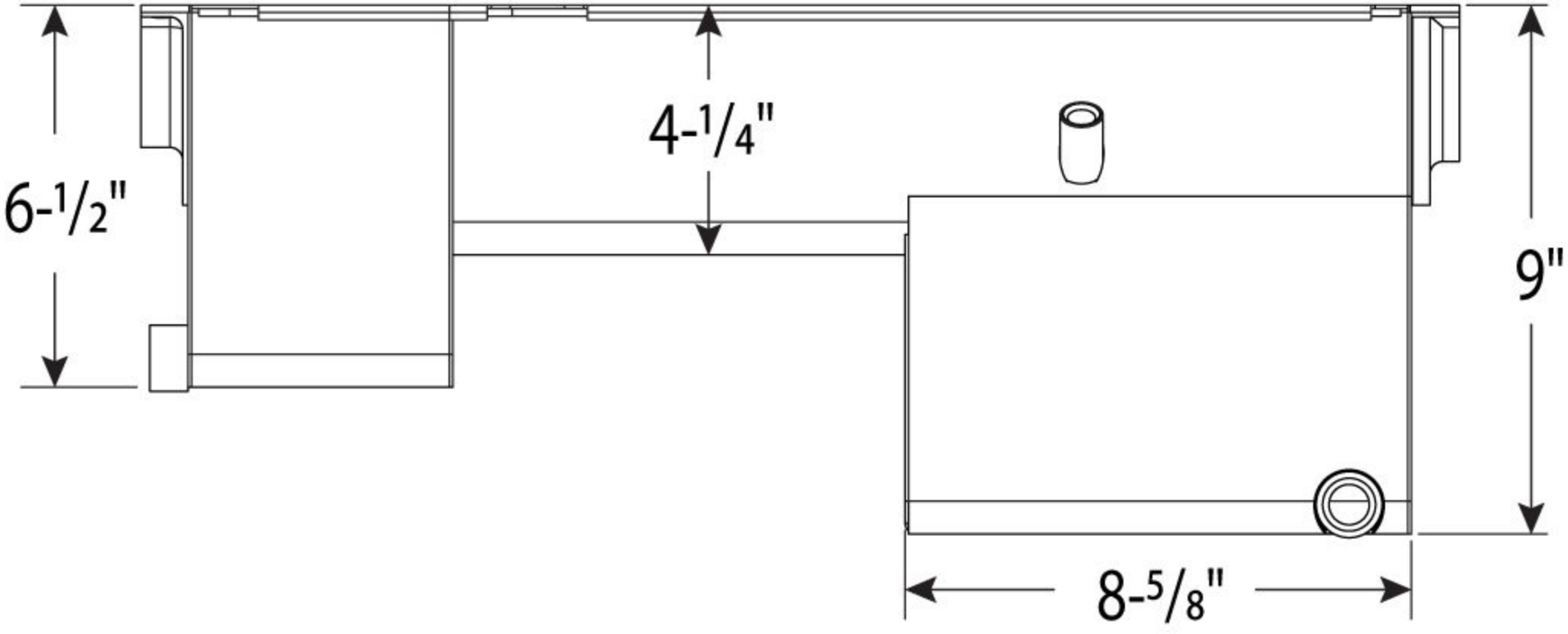
6-1/2"
4-1/4"
9"
8-5/8"