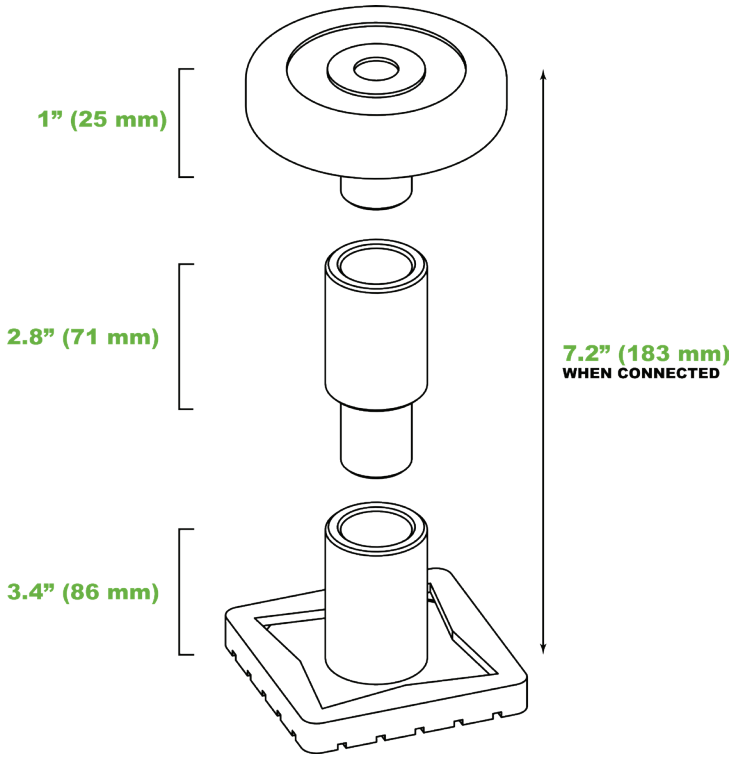
1” (25 mm)
2.8” (71 mm)
3.4” (86 mm)
7.2” (183 mm)
WHEN CONNECTED