Installation Instructions for 50545
Small Block Chevy Low Mount Alternator Bracket, Short Water Pump

Installation Instructions:
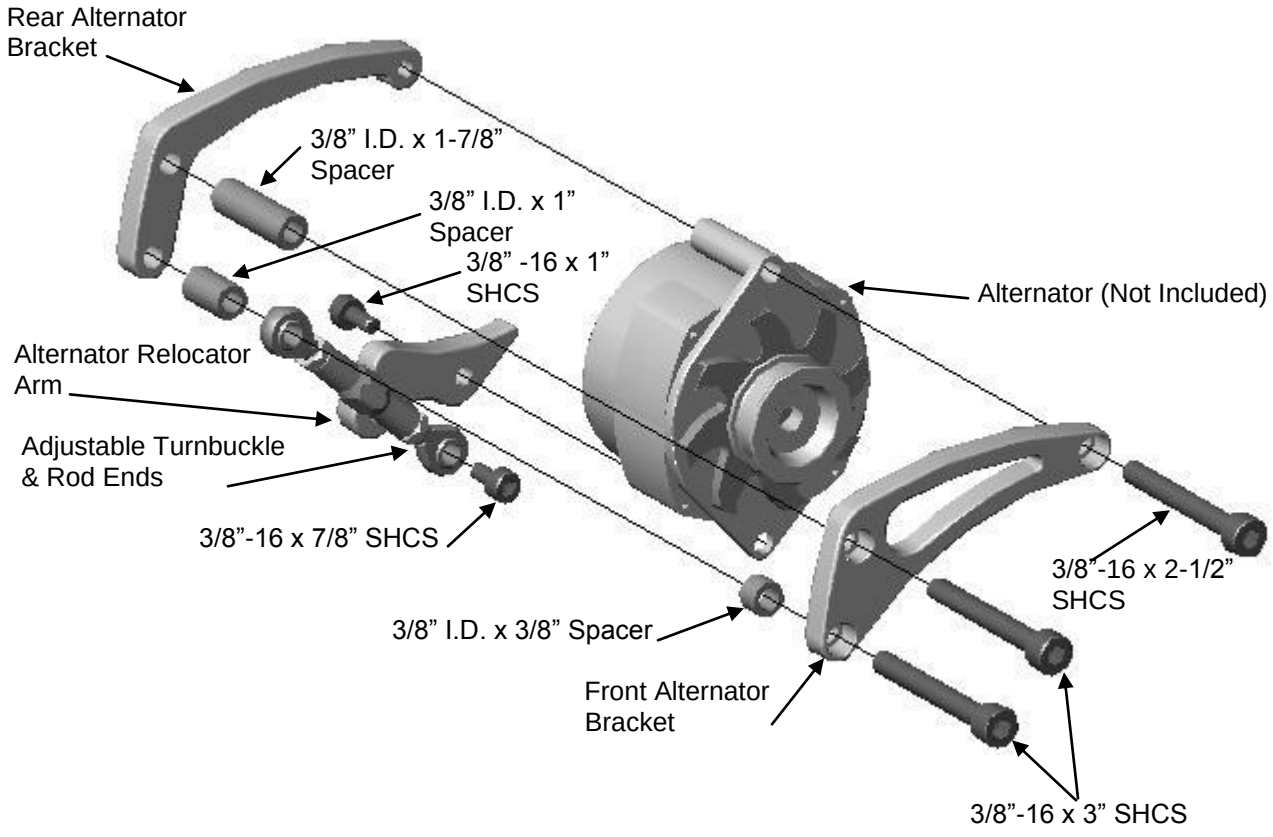
1. The bracket mounts to the lower driver's side engine block.
2. Use the exploded view below for assembly.